City of Atlanta
Louise G. Howard Park

471 Collier Rd NW
ATLANTA, GA 30318

OWNER/ CONTACT
City of Atlanta
Department of Parks, Recreation, and Cultural Affairs
Harris Tower, Suite 1600
233 Peachtree St
Atlanta, Georgia 30308

Patricia K. Katz
Landscape Architect, RLA
(404) 546-6859
PKatz@AtlantaGA.gov

GENERAL CONTRACTOR
T.B.D.

LANDSCAPE ARCHITECT
Pond | Ecos
834 Inman Village Pkwy, Suite 100
Atlanta, GA 30307
(404) 221-1900
Contact: Matthew Wilder, ASLA, LEED AP

LOCATION MAP:

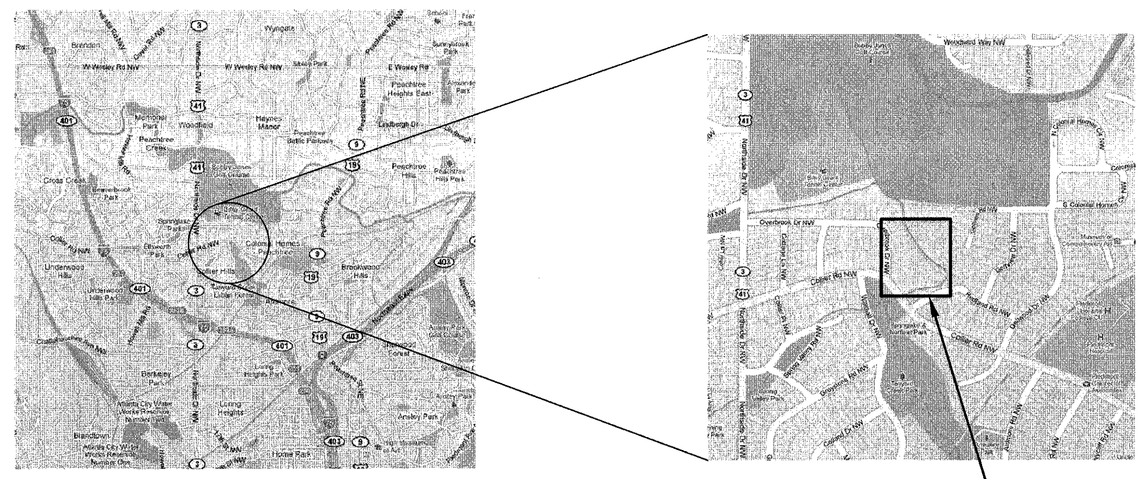

SCALE: NTS

BEFORE STARTING ANY LAND-DISTURBING ACTIVITIES, THE CONTRACTOR IS REQUIRED TO SCHEDULE A PRE-CONSTRUCTION MEETING WITH EROSION AND SEDIMENT CONTROL:

CALL 404-546-1305

FAILURE TO SCHEDULE MAY RESULT IN A STOP WORK ORDER OR PERMIT REVOCATION.

GENERAL NOTES:

1. NO GRADED SLOPE SHALL EXCEED 2H:1V.

2. WALKS AND TRAILS TO HAVE MAXIMUM CROSS SLOPE OF 2%.

3. CONTRACTOR MUST FIELD VERIFY EXISTING CONDITIONS.

4. CONTRACTOR TO ABIDE BY ALL STATE AND COUNTY CODES AND ORDINANCES PRIOR TO AND DURING CONSTRUCTION.

5. CONTRACTOR IS RESPONSIBLE FOR OBTAINING ALL REQUIRED PERMITS FOR THE PROPOSED WORK.

6. CONTRACTOR TO ERECT THE APPROPRIATE BARRICADES, SIGNAGE, AND WARNINGS TO PROTECT THE SITE DURING DEMOLITION AND CONSTRUCTION.

7. ALL TREE PROTECTION AREAS TO BE PROTECTED FROM SEDIMENTATION.

8. ALL TREE PROTECTION FENCING TO BE INSTALLED PRIOR TO THE START OF LAND DISTURBANCE, AND MAINTAINED UNTIL FINAL LANDSCAPING IS COMPLETE.

9. ALL TREE PROTECTION FENCING TO BE INSPECTED DAILY, AND REPAIRED AND REPLACED AS NEEDED.

10. NO PARKING, STORAGE OR OTHER CONSTRUCTION ACTIVITIES ARE TO OCCUR WITHIN TREE PROTECTION AREAS.

11. CONTRACTOR TO NOTIFY LANDSCAPE ARCHITECT/OWNER IMMEDIATELY IF ANY ITEM EXISTING ON SITE IS NOT SHOWN ON THIS PLAN (e.g. UTILITY/ DRAINAGE LINES).

12. ANY UNDERGROUND UTILITY THAT IS BROKEN OR DISRUPTED THAT IS NOT A PART OF A SCHEDULED OUTAGE SHALL BE REPAIRED AS QUICKLY AS POSSIBLE AT CONTRACTORS EXPENSE.

13. CONTRACTOR SHALL TAKE ALL NECESSARY SAFETY PRECAUTIONS FOR THE PROTECTION OF THE PUBLIC, INCLUDING BUT NOT LIMITED TO THE INSTALLATION OF LIGHTS, BARRIERS, FLAGMEN, AND TEMPORARY DETOURS, ETC.

14. CONTRACTOR SHALL INSTALL ALL EROSION CONTROL MEASURES PRIOR TO ANY LAND DISTURBING ACTIVITIES OR DEMOLITION BEGINNING ON THE SITE.

15. CONTRACTOR SHALL UTILIZE ALL PRACTICABLE MEASURES TO ENSURE THE PREVENTION OF ENVIRONMENTAL IMPACTS ARE TAKEN BY ALL PERSONNEL EMPLOYED IN THE WORK. IMPACTS INCLUDE NOISE, DUST, CHEMICAL SPILLS, EROSION AND SEDIMENTATION, AND DAMAGE TO EXISTING TREES & PLANTS.

16. CONTRACTOR SHALL ENSURE POSITIVE DRAINAGE AWAY FROM STRUCTURES.

17. CONTRACTOR TO VERIFY DEPTH OF EXISTING UTILITY LINES PRIOR TO LAND DISTURBANCE.

Construction Activity Schedule

ACTIVITY SCHEDULE: APRIL, 2012 - JULY, 2012

ACTIVITY / WEEK	1	2	3	4	5	6	7	8	9	10	11	12
SEDIMENT CONTROL												
DEMOLITION												
TEMPORARY GRASSING												
GRADING												
MAINTENANCE OF EROSION CONTROL												
SITE CONSTRUCTION												
CLEARING AND GRUBBING												
REMOVAL OF ES & PC DEVICES												
FINAL CLEAN-UP/ DEMOBILIZE												

Total Site Area:	5.52 acres
Total Area of Disturbance:	.53 acres
Total New Impervious Surface:	1,746 sf
Total Removed Impervious Surface:	1,986 sf
Net New Impervious Surface:	-240 sf

*This is a re-development project.

Dirt statement:			Demolition Debris:	
Fill:	408	CY	Debris removed:	90 CY
Cut:	472	CY		
Net Haul to/from site:	64	CY excess cut	Net Haul from site:	154 CY

*NO HAUL ROUTE PERMIT REQUIRED

PRIOR TO THE LAND-DISTURBING ACTIVITIES, THE CONTRACTOR SHALL SCHEDULE A PRECONSTRUCTION MEETING WITH THE AREA EROSION CONTROL INSPECTOR. CALL (404) 546-1300 TO CONTACT THE INSPECTOR.

THE ESCAPE OF SEDIMENT FROM THE SITE SHALL BE PREVENTED BY THE INSTALLING OF EROSION AND SEDIMENT CONTROL MEASURES AND PRACTICES PRIOR TO, OR CONCURRENT WITH LAND-DISTURBING ACTIVITIES.

EROSION CONTROL MEASURES WILL BE MAINTAINED AT ALL TIMES. IF FULL IMPLEMENTATION OF THE APPROVED PLAN DOES NOT PROVIDE FOR EFFECTIVE EROSION CONTROL, ADDITIONAL EROSION AND SEDIMENT CONTROL MEASURES SHALL BE IMPLEMENTED TO CONTROL OR TREAT THE SEDIMENT SOURCE.

SHEET INDEX

SHEETS L100 -- COVER SHEET
SHEETS L200 -- EXISTING CONDITIONS/ DEMO PLAN
SHEETS L300 -- TREE PROTECTION PLAN
SHEETS L400 -- EROSION AND SEDIMENT CONTROL PLAN
SHEETS L401 -- EROSION AND SEDIMENT CONTROL- INITIAL PHASE
SHEETS L402 -- EROSION AND SEDIMENT CONTROL- INTERMEDIATE PHASE
SHEETS L403 -- EROSION AND SEDIMENT CONTROL- FINAL PHASE
SHEETS L404 -- EROSION AND SEDIMENT CONTROL
SHEETS L405 -- EROSION AND SEDIMENT CONTROL
SHEETS L500 -- LAYOUT PLAN
SHEETS L501 -- GRADING PLAN
SHEETS L502 -- CONSTRUCTION DETAILS
SHEETS L503 -- CONSTRUCTION DETAILS
SHEETS L600 -- LANDSCAPE PLAN
SHEETS L601 -- LANDSCAPE ENLARGEMENTS
SHEETS L602 -- LANDSCAPE DETAILS

THIS PROJECT IS SHOWN TO BE LOCATED WITHIN A DESIGNATED FLOODPLAIN, AS PER FEMA MAP 13121C0242E EFFECTIVE JUNE 22, 1998.

NOTE: BOUNDARY AND TOPOGRAPHIC SURVEY INFORMATION PROVIDED BY:
HARTRAMPF ENGINEERS, ARCHITECTS, SURVEYORS
7000 CENTRAL PKWY, SUITE 1475, ATLANTA GA, 30328. 678-320-1888

811 Know what's below. Call before you dig.

POND | ECOS
834 INMAN VILLAGE PARKWAY
SUITE 100
ATLANTA, GEORGIA 30307
(V) 404-221-1900 (F) 404-215-9111

COPYRIGHT © 2011 BY POND & COMPANY. ALL RIGHTS RESERVED. NO COPYING OR DUPLICATION OF THESE DOCUMENTS IS ALLOWED WITHOUT THE EXPRESS WRITTEN AGREEMENT OF POND & COMPANY

Louise G. Howard Park
471 Collier Road NW, Atlanta Ga 30318
Fulton County, Atlanta GA Land Lot 146, 17th District

GEORGIA REGISTERED No. 1398 LANDSCAPE ARCHITECT MATTHEW WILDER 12/01/11

REVISIONS

SHEET TITLE
Cover Sheet

DESIGNED BY	FILE NAME
DRAWN BY T.P.	SHEET L100
CHECKED BY	
PROJECT NO. 11110295	
DATE	

3412	PECAN 15"
3413	POPLAR 15"
3416	PECAN 30"28"
3423	HICKORY 42"
3429	HICKORY 30"
3432	TWIN SASAFRASS 9" 7"
3433	POPLAR 22"
3436	SYCAMORE 11"
3437	SOURWOOD 13"
3440	SYCAMORE 10"
3441	TWIN SOURWOOD 12"12"
3442	SYCAMORE 24"
3443	SYCAMORE 12"
3444	POPLAR 6"
3445	POPLAR 8"
3446	TWIN SYCAMORE 38" 9"
3447	POPLAR 13"
3503	OAK 28"
3504	OAK 28"
3505	OAK 15"
3506	OAK 10"
3507	OAK 34"
3508	HICKORY 18"
3509	OAK 23"
3510	PINE 16"
3511	POPLAR 32"
3512	POPLAR 29"
3513	SOURWOOD 9"
3514	OAK 14"
3515	SOURWOOD 14"
3516	CATAPA 12"
3517	BASSW00D 18"
3518	OAK 17"
3519	SOURWOOD 10"
3520	POPLAR 38"
3521	OAK 15"
3522	OAK 24"
3523	OAK 15"
3524	TWIN SOURWOOD 28"10"
3525	HACKBERRY 12"
3526	HACKBERRY 12"
3529	SASAFRASS 10"
3530	OAK 50"
3531	HICKORY 20"
3532	CATALPA 10"
3533	HICKORY 9"
3534	HICKORY 9"
3535	PINE 21"
3536	PINE 28"
3537	POPLAR 22"
3538	SPRUCE 9"
3539	SPRUCE 9"
3540	HICKORY 9"
3541	BASSWOOD 23"
3542	BASSWOOD 25"
3543	BASSWOOD 17"
3544	BOX ELDER 17"
3545	BOX ELDER 11"
3546	BOX ELDER 11"
3547	BASSWOOD 9"
3548	BASSWOOD 9"
3549	BASSWOOD 22"
3550	BASSWOOD 26"
3551	BASSWOOD 16"
3552	CATALPA 12"
3553	OAK 23" DNE
3554	PINE 16"
3557	BASSWOOD 46"
3558	HICKORY 36"
3559	ELM 15"
3560	SASAFRASS 9"
3561	SASAFRASS 9"
3562	OAK 22"
3563	HICKORY 19"
3564	POPLAR 21"
3565	HICKORY 9"
3566	PERSIMMON 12"
3567	POPLAR 43"
3568	OAK 29"
3569	CATALPA 9"
3570	HICKORY 11"
3571	HICKORY 9"
3572	HICKORY 15"
3573	POPLAR 28"
3574	HICKORY 12"
3575	OAK 24"
3576	ELM 28"
3577	POPLAR 9"
3581	OAK 24"
3595	CATALPA 11"
3597	POPLAR 11"
3598	BEECH 37"
3599	BASSWOOD 36"
3600	SYCAMORE 18"
3601	ELM 16"
3602	OAK 30"
3603	ELM 11"
3604	POPLAR 14"
3605	POPLAR 9"
3606	OAK 15"
3607	CATALPA
3608	PERSIMON 12"
3609	POPLAR 12"
3610	WILLOW 40"
3611	POPLAR 37"
3612	POPLAR 37"
3613	HICKORY 14"
3614	PINE 17"
3615	HICKORY 15"
3618	SAS 8"
3623	OAK 28"
3624	POPLAR 20"
3625	OAK 30"
3626	PINE 24"
3627	OAK 18"
3628	PINE 20"
3629	SWEETGUM 12"
3630	PINE 32"
3631	PINE 24"
3632	HICKORY 20"
3633	HICKORY 18"
3634	ELM 11"
3635	PINE 28"
3636	HICKORY 16"
3640	PINE 28" DNE
3641	PINE 21"
3642	PINE 26"
3643	S. MAGNOLIA 10"
3644	OAK 39"
3645	OAK 20"
3646	SWEETGUM 12"
3647	PINE 30"
3648	HICKORY 7"
3651	SWEETGUM 14"
3652	POPLAR 9"
3654	TWIN POPLAR 26"20"
3655	SWEETGUM 9"
3658	ELM 8"
3659	CATALPA 6"
3661	CATALPA 9"
3662	POPLAR 11"
3663	ELM 6"
3664	BASSWOOD 22"
3665	HICKORY 12"
3666	BIRCH 12"
3667	BASSWOOD 10"
3688	ELM 9"
3669	ELM 6"
3670	HONEY LOCUST 9"
3691	BIRCH 11"
3693	OAK 12"
3694	OAK 20"
3696	PINE 32"
3697	TWIN SOURWOOD 7"6"
3698	ELM 12"
3699	TWIN ELM 30"30"
3700	SWEETGUM 30"
3721	SOURWOOD 6"
3722	SOURWOOD 6"
3723	SOURWOOD 8"
3724	SYCAMORE 9"
3725	PINE 11"
3727	PINE 27"
3728	PINE 22"
3734	PINE 26"
3736	PINE 24"
3745	PINE 17"
3749	OAK 39"(POOR HEALTH)
3750	PINE 28"
3756	PINE 34"
3757	PINE 20"
3761	PINE 27"
3762	PINE 24"
3763	TWIN SASSAFRAS12"DNE
3764	PINE 24"
3766	PINE 22"
3767	PINE 27"
3768	PINE 22"
3769	PINE 20"
3770	PINE 20"
3861	PINE 16"
3862	PINE 28"
3863	PINE 16"
3864	PINE 14"
3865	PINE 12"
3866	PINE 18"
3867	PINE 25"
4080	ARCADIA 10"
4081	PEAR 6"
4082	PEAR 6"
4083	TRIPLE BIRCH 14"10"8"
4084	PINE 42"
4085	BIRCH 9"
4086	MULBERRY 6"
4088	PINE 30"
4089	PINE 30 "
4091	POPLAR 30"
4104	SOURWOOD 6"
4105	SOURWOOD 6"
4106	SOURWOOD 6"
4107	DOGWOOD 6"
4108	HEMLOCK 6 "
4109	DOGWOOD 6" DNE
4110	HEMLOCK 6"

ADDITIONAL TREES:	
3924	Oak 46"
3925	Dogwood 6" DNE
3926	Pine 18"
3927	Poplar 13"
3928	Sweetgum 30" DNE
3937	Oak 32"
3938	Dogwood 9"
3939	Dogwood 9"
3940	Sweetgum 36"
3941	Pine 25"
3943	Maple 18"
3944	PSM 14", 10" DNE
3945	Pine 27"
3955	Poplar 31"
3956	Poplar 31"
3957	Poplar 36" DNE
TREES NOT IN ORIGINAL SURVEY:	
L101	Crabapple 7"
L102	Crabapple 6"
L103	Crabapple 8"
L104	Tulip Poplar 34"
L105	Dogwood 6"
L106	Oak 12"
L107	S. Magnolia 12", 8", 9"
L108	Pine 27"
L109	S. Magnolia 11"
L110	Tulip Poplar 35"
L111	Ash 15"
L112	Ash 14"
L113	Ash 17"
L114	Spruce 6"
L115	Spruce 6"
L116	Basswood 9"
L117	Basswood 7"
L118	Red Maple 15"
L119	Hemlock 6"
L120	Dogwood 5"(Poor Health)
L121	Pine 7"
L122	Pine 25"
L123	Pine 29"

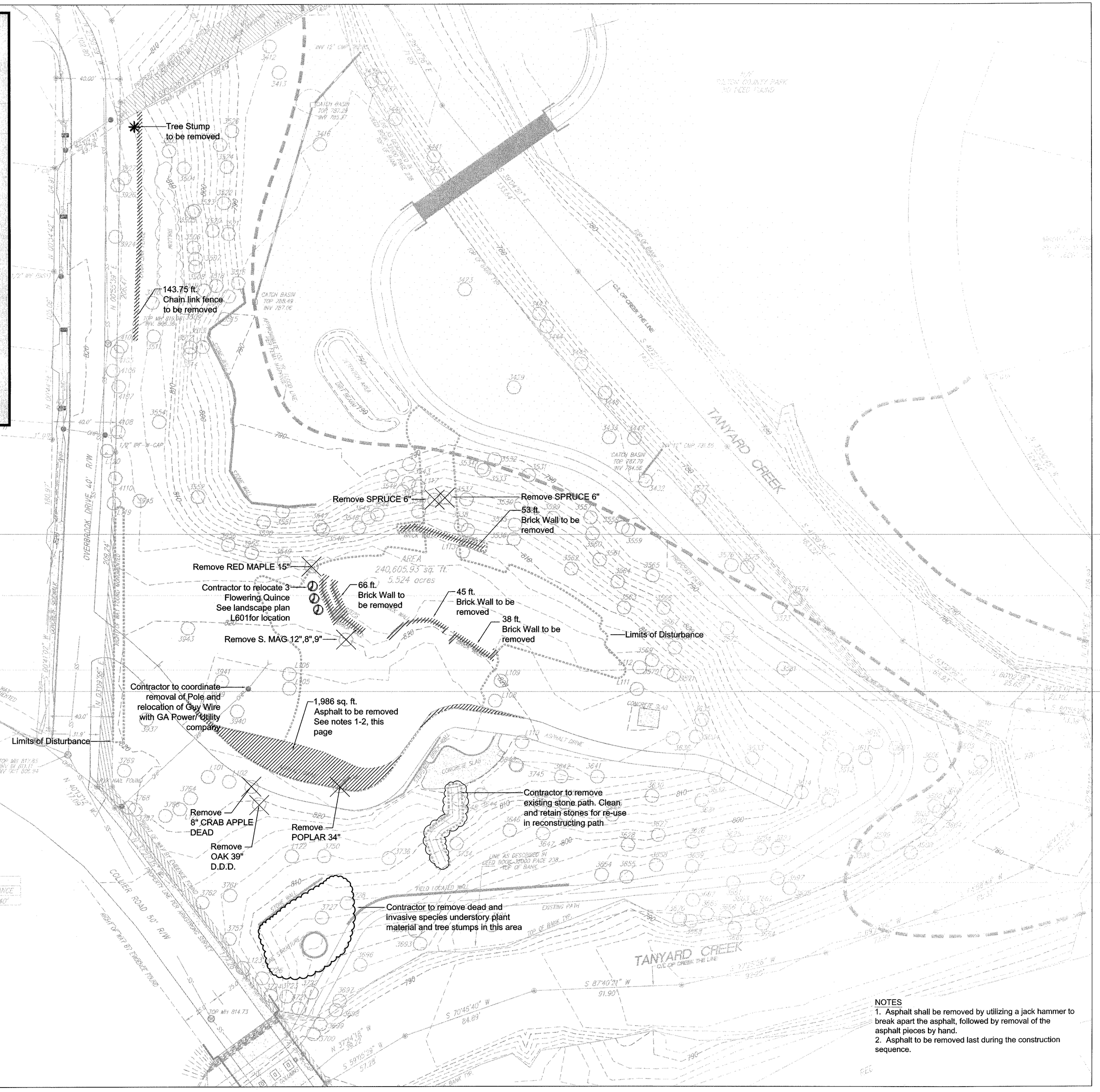

LINE TABLE		
LINE	BEARING	DISTANCE
L1	N 00°25'58" W	12.34'

CURVE TABLE				
CURVE	LENGTH	RADIUS	BEARING	DISTANCE
C1	80.92'	205.00'	N 65°28'30" W	80.40'

NOTES
1. Asphalt shall be removed by utilizing a jack hammer to break apart the asphalt, followed by removal of the asphalt pieces by hand.
2. Asphalt to be removed last during the construction sequence.

POND ECOS
POND | ECOS
834 INMAN VILLAGE PARKWAY
SUITE 100
ATLANTA, GEORGIA 30307
(V) 404-221-1900 (F) 404-215-9111

COPYRIGHT © 2011 BY POND & COMPANY. ALL RIGHTS RESERVED. NO COPYING OR DUPLICATION OF THESE DOCUMENTS IS ALLOWED WITHOUT THE EXPRESS WRITTEN AGREEMENT OF POND & COMPANY

Louise G. Howard Park

471 Collier Road NW, Atlanta Ga 30318

Fulton County, Atlanta GA Land Lot 146, 17th District

GEORGIA REGISTERED LANDSCAPE ARCHITECT MATTHEW WILDER

REVISIONS

SHEET TITLE

Existing Conditions/ Demolition Plan

DESIGNED BY	FILE NAME
DRAWN BY T.P.	SHEET
CHECKED BY	L200
PROJECT NO. 1110295	
DATE	

CRITICAL ROOT ZONE (CRZ) DISTURBANCE				
KEY	SPECIES	DBH	%CRZ DISTURBANCE	STATUS
3530	OAK	50"	10%	SAVED
3536	PINE	28"	9%	SAVED
3537	POPLAR	22"	31%	SAVED WITH PRESCRIPTION
3538	SPRUCE	9"	38%	LOST
3539	SPRUCE	9"	28%	SAVED WITH PRESCRIPTION
3540	LOCUST	9"	31%	SAVED WITH PRESCRIPTION
3541	BASSWOOD	23"	30%	SAVED WITH PRESCRIPTION
3542	BASSWOOD	25"	10%	SAVED
3543	BASSWOOD	13"	20%	SAVED
3549	BASSWOOD	22"	19%	SAVED
3562	OAK	22"	10%	SAVED
3563	HICKORY	19"	1%	SAVED
3567	POPLAR	43"	1%	SAVED
3749	OAK	39"	N/A	REMOVED (D.D.D.)
3937	OAK	32"	19%	SAVED
3940	SWEETGUM	36"	33%	SAVED WITH PRESCRIPTION
3955	POPLAR	31"	8%	SAVED
3956	POPLAR	31"	1%	SAVED
L103	CRABAPPLE	8"	N/A	REMOVED (D.D.D.)
L104	TULIP POPLAR	34"	N/A	REMOVED
L105	DOGWOOD	6"	0%	SAVED
L106	PERSIMMON	12"	15%	SAVED
L107	S. MAGNOLIA	12",8",9"	N/A	REMOVED
L108	PINE	27"	26%	SAVED WITH PRESCRIPTION
L109	S. MAGNOLIA	11"	10%	SAVED
L110	TULIP POPLAR	35"	26%	SAVED WITH PRESCRIPTION
L112	ASH	14"	3%	SAVED
L113	HICKORY	17"	82%	LOST
L114	SPRUCE	6"	N/A	REMOVED
L115	SPRUCE	6"	N/A	REMOVED
L117	RED MAPLE	7"	33%	SAVED WITH PRESCRIPTION
L118	RED MAPLE	15"	N/A	REMOVED

TOTAL DBH REMOVED: 73
TOTAL DBH LOST: 26
TOTAL DBH TO BE REPLACED: 99
TOTAL DBH REPLACED: 99

SEE SHEET L600 AND L602 FOR TREE LOCATIONS AND SIZES

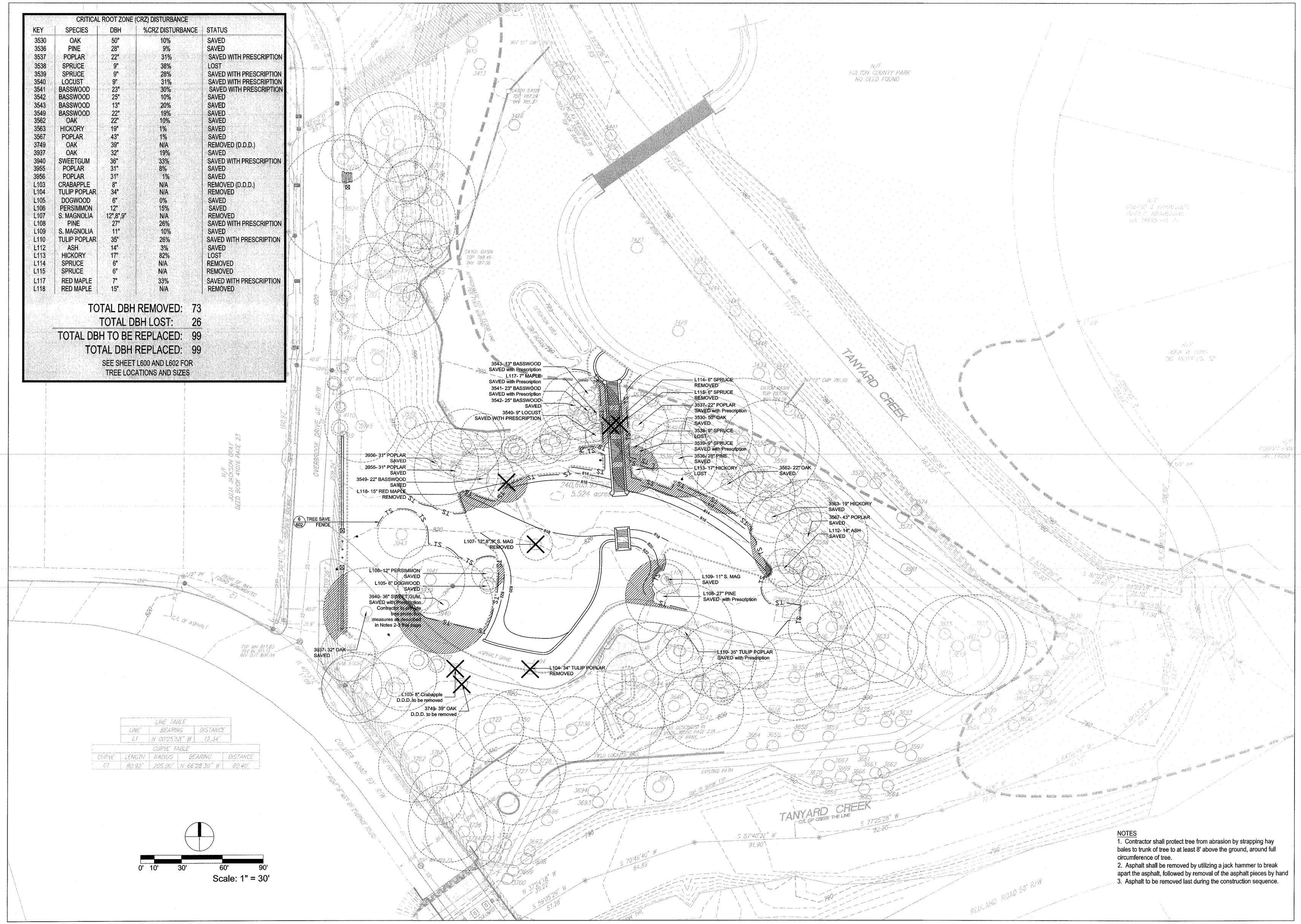

LINE TABLE		
LINE	BEARING	DISTANCE
L1	N 00°25'53" W	12.34'

CURVE TABLE				
CURVE	LENGTH	RADIUS	BEARING	DISTANCE
C1	80.92'	205.00'	N 66°28'30" W	80.40'

NOTES
1. Contractor shall protect tree from abrasion by strapping hay bales to trunk of tree to at least 8' above the ground, around full circumference of tree.
2. Asphalt shall be removed by utilizing a jack hammer to break apart the asphalt, followed by removal of the asphalt pieces by hand
3. Asphalt to be removed last during the construction sequence.

POND ECOS
POND | ECOS
834 INMAN VILLAGE PARKWAY
SUITE 100
ATLANTA, GEORGIA 30307
(V) 404-221-1900 (F) 404-215-9111

COPYRIGHT © 2011 BY POND & COMPANY. ALL RIGHTS RESERVED. NO COPYING OR DUPLICATION OF THESE DOCUMENTS IS ALLOWED WITHOUT WRITTEN PERMISSION AGREEMENT OF POND & COMPANY

Louise G. Howard Park

471 Collier Road NW, Atlanta Ga 30318
Fulton County, Atlanta GA Land Lot 146, 17th District

GEORGIA REGISTERED LANDSCAPE ARCHITECT MATTHEW WILDER
12/6/11

REVISIONS

SHEET TITLE
Tree Protection/ Replacement Plan

DESIGNED BY	FILE NAME
DRAWN BY T.P.	SHEET
CHECKED BY	L300
PROJECT NO. 1110295	
DATE	

I certify under penalty of law that this plan was prepared after a site visit to the location described herein, by myself or my authorized agent under my direct supervision.

Matthew A Wilder, ASLA, LEED AP
GSWCC # 0000015143
Expires 08/18/2012

I certify that this Erosion Sedimentation and Pollution Control Plan has been prepared in accordance with Part IV of the General NPDES permit No. GAR100001

I certify that the permittee's ESPCP provides for appropriate and comprehensive system of Best Management Practices required by the Georgia Water Quality Control Act and the document "Manual for Erosion and Sediment Control in Georgia" published by the State Soil and Water Conservation Commission as of January 1 of the year in which the land disturbing activity is permitted, provides for the sampling of the receiving water(s) or the sampling of the storm water outfalls and that the designed system of BMPs and sampling methods is expected to meet the requirements contained in the general NPDES permit No. GAR100001.

I certify that the Permittee's ESPCP provides for the monitoring of: (A) all perennial and intermittent streams and other water bodies shown on the USGS topographic map and all other field verified perennial and intermittent streams and other water bodies, or (B) where any such specific identified perennial or intermittent stream and other water body is not proposed to be sampled, I have determined in my professional judgement, utilizing the factors required in the General NPDES permit No. GAR100001, that the increase in turbidity of each specific identified sampled receiving water will be representative of the increase in the turbidity of a specific identified unsampled receiving water.

I certify under penalty of law that this document and all the attachments were prepared under my direction or supervision in accordance with a system designed to assure that the certified personnel properly gather and evaluate the information submitted. Based on my inquiry of the person or persons who manage the system, or those persons directly responsible for gathering the information, the information submitted is, to the best of my knowledge and belief true, accurate, and complete. I am aware that there are significant penalties for submitting false information, including the possibility of fine and imprisonment for knowing violations.

I certify under penalty of law that this plan was prepared after a site visit to the location described herein by myself or my authorized agent, under my supervision.

ENGINEER'S CERTIFICATION STATEMENT:

With my initials at the line above and my seal and signature below, I Matthew Wilder, ASLA A professional Landscape Architect licensed in the State of Georgia, hereby certify that I have personally reviewed the attached submittal plans for a land disturbance permit. In my opinion these submittal plans meet all applicable regulations and ordinances of Henry County. Henry County and other affected parties may rely on this certification.

Signed: _____ Georgia Registration# LA001386

City of Atlanta
Howard Park

471 Collier Rd NW
ATLANTA, GA 30318

LandLot 146, 17th District
Fulton County, Atlanta GA

LOCATION MAP:

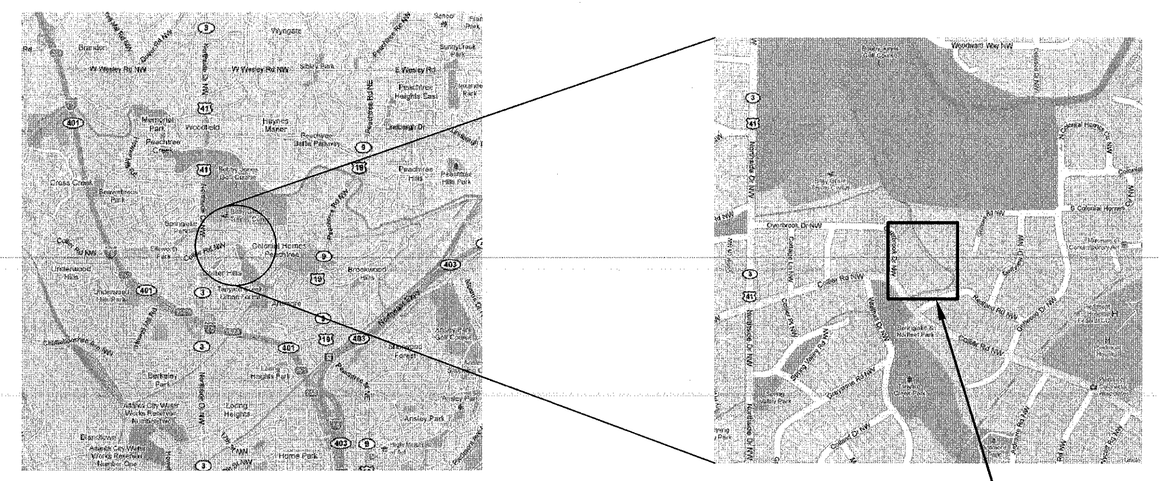

SCALE: NTS

NOTES:
a) Prior to land-disturbing activities, the Contractor shall schedule a pre-construction meeting with the area Erosion Control inspector. Call (404) 546-1300 to contact the inspector.
b) The escape of sediment from the site shall be prevented by the installation of erosion and sediment control measures and practices prior to, or concurrent with, land disturbing activities.
c) Erosion control measures will be maintained at all times. If full implementation of the approved plan does not provide for effective erosion control, additional erosion and sediment control measures shall be implemented to control or treat the sediment source.
d) Any disturbed area left exposed for a period greater than 14 days shall be stabilized with mulch and temporary seeding.
e) Any disturbed areas remaining idle for 30 days shall be stabilized with permanent vegetation.
f) Erosion and sediment control measures shall be inspected at least weekly, after each rain, and repaired as necessary.
g) Additional erosion and sediment control measures shall be installed if determined necessary by on-site inspection.
h) Silt fence shall meet the requirements of Section 171 - Type C temporary silt fence, of the Georgia Department of Transportation Standard Specifications, 1993 edition, and be wire reinforced.
i) The property owner and contractor are equally responsible for all erosion control activities.
j) It is the responsibility of the contractor to obtain qualified professional advice when questions arise concerning design and effectiveness of erosion control devices, not the City of Atlanta.
k) All temporary and permanent seeding must be performed at the appropriate season. In such instances where the establishment of vegetation is inopportune due to season or drought, disturbed areas shall be temporarily stabilized using 2"-4" of mulch (Ds1). Additional plantings will be necessary if a sufficient stand of grass fails to grow.
l) The City's designee will verify adequate cover (100% cover, 70% density) of permanent stabilization (Ds3, Ds4).
m) Silt fences shall not be placed in stream buffer or floodplains, unless utilized for the construction of an exempt activity (i.e. roadway drainage structures, sewer/water crossings, or drainage structures) per the approved plans. For such disturbances within the buffer, the area shall be immediately stabilized using erosion control matting and/or blankets once the activity is complete.
n) n/a
o) Sediment storage volume @ 67 cy/acre must be installed prior to any other land disturbance activity and in place until final stabilization occurs.
p) For each site on which land disturbing activity occurs, each entity or person acting as either a primary, secondary, or tertiary permittee, as defined in the state general permit, shall have as a minimum one person who is in responsible charge of erosion and sedimentation control activities on behalf of said entity or person and meets the applicable (Level 1A) education or training certification requirements (O.C.G.A. 12-7-19(a)(2)).
q) Subcontractors involved with land disturbance activities shall meet the education requirements (Level 1) described in O.C.G.A 12-7-19.

Site - Project - Adjacent Land Descriptions
Site: The project is located within the Collier Hills Neighborhood of Atlanta, GA along Collier Rd in between Northside Dr and Peachtree Rd. This former single family home site currently consists of grassed areas bordered by forested slopes consisting of trees of varying size, type, and age.

Project: The proposed project is a redevelopment project. Landscape features such as paths, walls, stairs and a gazebo will be added in order to make the park more accessible and inviting. The existing topography will be largely preserved, with a few modifications in order to create more usable open lawn. Existing hardscape features within the site will be re-constructed and re-used while dead, dying, diseased, and invasive plant species will be removed from the site and replaced with a predominantly native landscape of perennial tall grasses and flowering perennials, shrubs and trees.

Adjacent Areas: The landscape improvements will take place entirely within the site boundaries. Single-family homes are immediately adjacent to the areas receiving landscape improvements. Other features of note that are either within or adjacent to the project boundaries are a tributary of Peachtree Creek that runs through the site and the multi-use PATH trail which runs alongside the stream.

The escape of sediment from the site shall be prevented by the installation of erosion and sediment control measures and practices prior to, or concurrent with, land disturbing activities.

Erosion control measures will be maintained at all times. If full implementation of the approved plan does not provide for effective erosion control, additional erosion and sediment control measures shall be implemented to control or treat the sediment source.

Any disturbed area left exposed for a period greater than 14 days shall be stabilized with mulch or temporary seeding.

The Contractor is not authorized to enter into stream buffers.

Primary Permittee:
City of Atlanta
Department of Parks, Recreation, and Cultural Affairs
Harris Tower, Suite 1600
233 Peachtree St
Atlanta, Georgia 30308

24 Hour Local Contact:
Patricia K. Katz
Landscape Architect, RLA
(404) 546-6859
PKatz@AtlantaGA.gov

Construction Activity Schedule

ACTIVITY SCHEDULE: APRIL, 2012 - JULY, 2012

ACTIVITY / WEEK	1	2	3	4	5	6	7	8	9	10	11	12
SEDIMENT CONTROL												
DEMOLITION												
TEMPORARY GRASSING												
GRADING												
MAINTENANCE OF EROSION CONTROL												
ETE CONSTRUCTION												
CLEARING AND GRUBBING												
REMOVAL OF ES & PC DEVICES												
FINAL CLEAN-UP/ DE-MOBILIZE												

Total Project Area = 5.52 acres
Disturbed Area = 0.53 acres
Net Impervious Gain = -240 sf

This is a redevelopment project

This site is located within a Flood Hazard Area as defined by FIRM Community panel map number 13121CO242E May 16, 2006

All erosion and sedimentation controls and tree protection measures shall be installed prior to landscape bed preparation.

Notice of Intent (NOI) is not required for this project.

SHEET INDEX

Sheet	Description
L400	ESPCP Cover Sheet
L401	ESPCP Initial Phase
L402	ESPCP Intermediate Phase
L403	ESPCP Final Phase
L404	ESPCP Details
L405	ESPCP Notes

POND ECOS
POND | ECOS
834 INMAN VILLAGE PARKWAY
SUITE 100
ATLANTA, GEORGIA 30307
(V) 404-221-1900 (F) 404-215-9111

COPYRIGHT © 2011 BY POND & COMPANY. ALL RIGHTS RESERVED. NO COPYING OR DUPLICATION OF THESE DOCUMENTS IS ALLOWED WITHOUT THE EXPRESS WRITTEN AGREEMENT OF POND & COMPANY

Louise G. Howard Park
471 Collier Road NW, Atlanta Ga 30318
Fulton County, Atlanta GA Land Lot 146, 17th District

REGISTERED LANDSCAPE ARCHITECT
MATTHEW WILDER
2/01/11

REVISIONS

SHEET TITLE
Erosion and Sediment Control Plan

DESIGNED BY	FILE NAME
DRAWN BY T.P.	SHEET L400
CHECKED BY	
PROJECT NO. 1110295	
DATE	

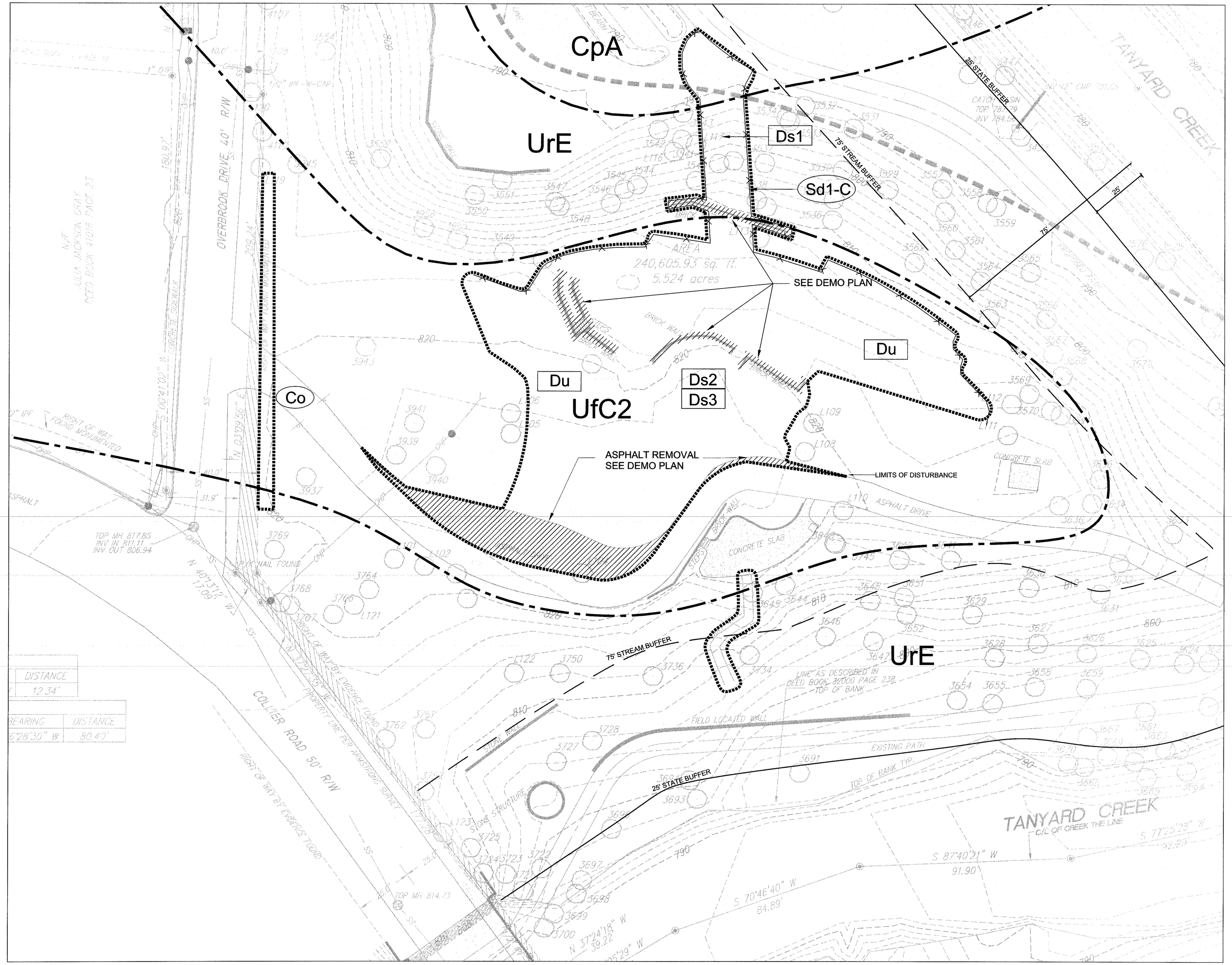

Land Lot 146, 17th District
Landscape improvements - Upgrades and physical improvements to create a park with an open lawn, staircase, paths and pavilion.

Louise G. Howard Park
471 Collier Rd NW
Atlanta, Georgia 30318

24 Hour Local Contact: Pat Katz
P: 404-546-6589

City of Atlanta
Department of Parks, Recreation, and Cultural Affairs
Harris Tower, Suite 1600
233 Peachtree St
Atlanta, Georgia 30308

Patricia K. Katz, Landscape Architect, RLA
404-546-6589, PKatz@AtlantaGA.gov
Harris Tower, Suite 1600
233 Peachtree St
Atlanta, Georgia 30308

Total Site Size: 5.52 Acres
Total Area of Disturbance: .53 Acres

SOILS:
CpA- Congaree sandy loam, 0 to 2 percent slopes, occasionally flooded
UfC2- Urban land-Cecil complex, 2 to 10 percent slopes, moderately eroded
UrE- Urban land-Rion complex, 10 to 25 percent slopes

Construction Activity Schedule

ACTIVITY SCHEDULE: APRIL, 2012 - JULY, 2012

ACTIVITY / WEEK	1	2	3	4	5	6	7	8	9	10	11	12
SEDIMENT CONTROL												
DEMOLITION												
TEMPORARY GRASSING												
GRADING												
MAINTENANCE OF EROSION CONTROL												
SITE CONSTRUCTION												
CLEARING AND GRUBBING												
REMOVAL OF ES & PC DEVICES												
FINAL CLEAN-UP/ DE-MOBILIZE												

NOTES:
a) Prior to land-disturbing activities, the Contractor shall schedule a pre-construction meeting with the area Erosion Control inspector. Call (404) 546-1300 to contact the inspector.
b) The escape of sediment from the site shall be prevented by the installation of erosion and sediment control measures and practices prior to, or concurrent with, land disturbing activities.
c) Erosion control measures will be maintained at all times. If full implementation of the approved plan does not provide for effective erosion control, additional erosion and sediment control measures shall be implemented to control or treat the sediment source.
d) Any disturbed area left exposed for a period greater than 14 days shall be stabilized with mulch and temporary seeding.
e) Any disturbed areas remaining idle for 30 days shall be stabilized with permanent vegetation.
f) Erosion and sediment control measures shall be inspected at least weekly, after each rain, and repaired as necessary.
g) Additional erosion and sediment control measures shall be installed if determined necessary by on-site inspection.
h) Silt fence shall meet the requirements of Section 171 - Type C temporary silt fence, of the Georgia Department of Transportation Standard Specifications, 1993 edition, and be wire reinforced.
i) The property owner and contractor are equally responsible for all erosion control activities.
j) It is the responsibility of the contractor to obtain qualified professional advice when questions arise concerning design and effectiveness of erosion control devices, not the City of Atlanta.
k) All temporary and permanent seeding must be performed at the appropriate season. In such instances where the establishment of vegetation is inopportune due to season or drought, disturbed areas shall be temporarily stabilized using 2"-4" of mulch (Ds1). Additional plantings will be necessary if a sufficient stand of grass fails to grow.
l) The City's designee will verify adequate cover (100% cover, 70% density) of permanent stabilization (Ds3, Ds4).
m) Silt fences shall not be placed in stream buffer or floodplains, unless utilized for the construction of an exempt activity (i.e. roadway drainage structures, sewer/water crossings, or drainage structures) per the approved plans. For such disturbances within the buffer, the area shall be immediately stabilized using erosion control matting and/or blankets once the activity is complete.
n) n/a
o) Sediment storage volume @ 67 cy/acre must be installed prior to any other land disturbance activity and in place until final stabilization occurs.
p) For each site on which land disturbing activity occurs, each entity or person acting as either a primary, secondary, or tertiary permittee, as defined in the state general permit, shall have as a minimum one person who is in responsible charge of erosion and sedimentation control activities on behalf of said entity or person and meets the applicable (Level 1A) education or training certification requirements (O.C.G.A. 12-7-19(a)(2)).
q) Subcontractors involved with land disturbance activities shall meet the education requirements (Level 1) described in O.C.G.A 12-7-19.

Erosion and Sediment Control Coding Legend from the Manual for Erosion and Sediment Control in Georgia

- Du — Dust Control
- Ds1 — Disturbed Area Stabilization (with mulching only)
- Ds2 — Disturbed Area Stabilization (with temporary seeding)
- Ds3 — Disturbed Area Stabilization (with permanent vegetation)
- Co — Construction Exit
- Sd1-C — Sediment Barrier

Matthew A Wilder, ASLA, LEED AP
GSWCC # 0000015143, Expires 08/18/2012

POND | ECOS
POND | ECOS
834 INMAN VILLAGE PARKWAY
SUITE 100
ATLANTA, GEORGIA 30307
(V) 404-221-1900 (F) 404-215-9111

COPYRIGHT © 2011 BY POND & COMPANY. ALL RIGHTS RESERVED. NO COPYING OR DUPLICATION OF THESE DOCUMENTS IS ALLOWED WITHOUT THE EXPRESS WRITTEN AGREEMENT OF POND & COMPANY

Louise G. Howard Park

471 Collier Road NW, Atlanta Ga 30318
Fulton County, Atlanta GA Land Lot 146, 17th District

GEORGIA REGISTERED LANDSCAPE ARCHITECT MATTHEW WILDER 12/01/11

REVISIONS

SHEET TITLE
ES and PC Initial Phase

DESIGNED BY	FILE NAME
DRAWN BY T.P.	SHEET L401
CHECKED BY	
PROJECT NO. 1110295	
DATE	

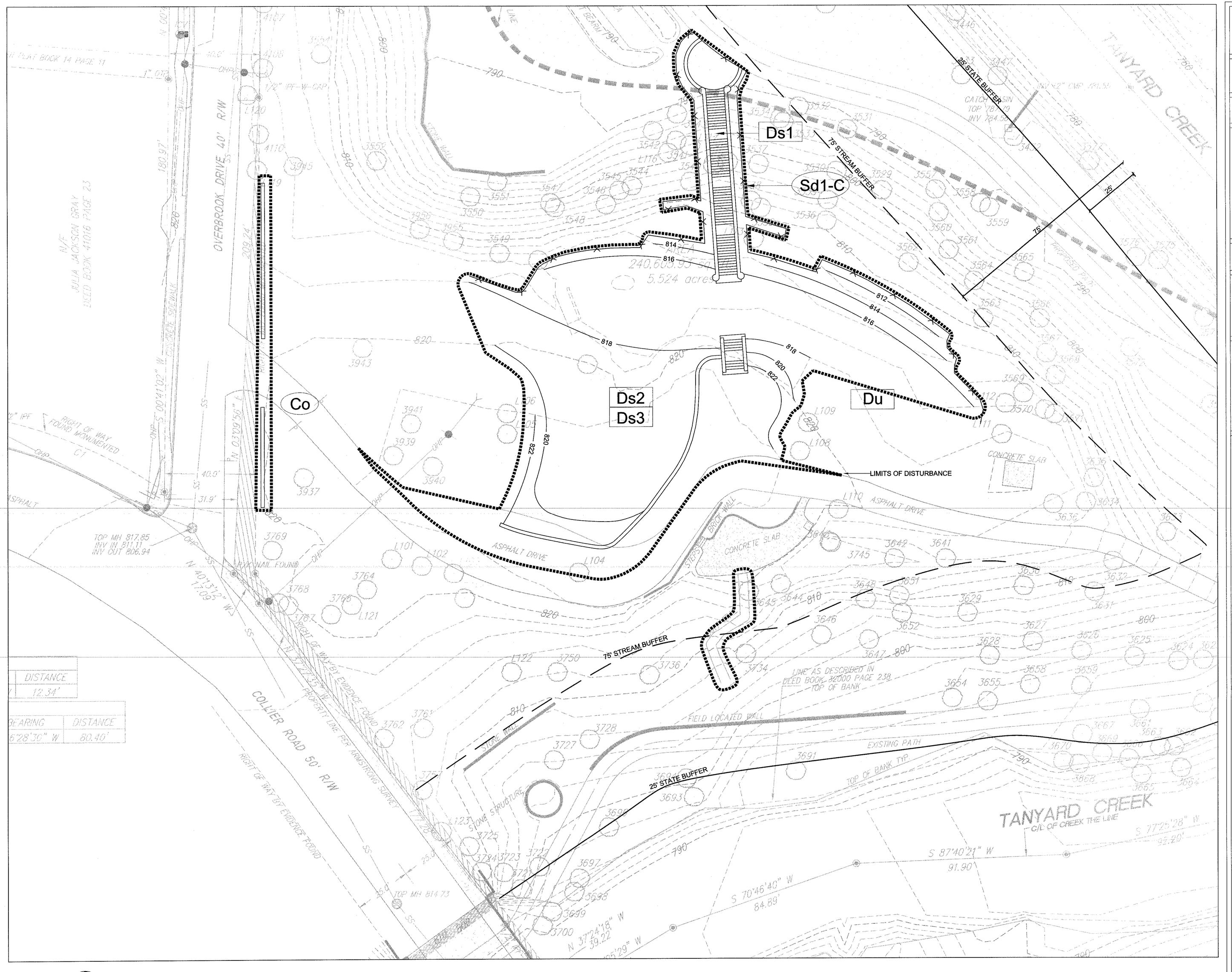

Land Lot 146, 17th District
Landscape improvements - Upgrades and physical improvements to create a park with an open lawn, staircase, paths and pavilion.

Louise G. Howard Park
471 Collier Rd NW
Atlanta, Georgia 30318

24 Hour Local Contact: Pat Katz
P: 404-546-6589

City of Atlanta
Department of Parks, Recreation, and Cultural Affairs
Harris Tower, Suite 1600
233 Peachtree St
Altanta, Georgia 30308

Patricia K. Katz, Landscape Architect, RLA
404-546-6589, PKatz@AtlantaGA.gov
Harris Tower, Suite 1600
233 Peachtree St
Altanta, Georgia 30308

Total Site Size: 5.52 Acres
Total Area of Disturbance: .53 Acres

SOILS:
CpA- Congaree sandy loam, 0 to 2 percent slopes, occasionally flooded
UfC2- Urban land-Cecil complex, 2 to 10 percent slopes, moderately eroded
UrE- Urban land-Rion complex, 10 to 25 percent slopes

Construction Activity Schedule

ACTIVITY SCHEDULE: APRIL, 2012 - JULY, 2012

ACTIVITY / WEEK	1	2	3	4	5	6	7	8	9	10	11	12
SEDIMENT CONTROL												
DEMOLITION												
TEMPORARY GRASSING												
GRADING												
MAINTENANCE OF EROSION CONTROL												
SITE CONSTRUCTION												
CLEARING AND GRUBBING												
REMOVAL OF ES & PC DEVICES												
FINAL CLEAN-UP/ DE-MOBILIZE												

NOTES:
a) Prior to land-disturbing activities, the Contractor shall schedule a pre-construction meeting with the area Erosion Control inspector. Call (404) 546-1300 to contact the inspector.
b) The escape of sediment from the site shall be prevented by the installation of erosion and sediment control measures and practices prior to, or concurrent with, land disturbing activities.
c) Erosion control measures will be maintained at all times. If full implementation of the approved plan does not provide for effective erosion control, additional erosion and sediment control measures shall be implemented to control or treat the sediment source.
d) Any disturbed area left exposed for a period greater than 14 days shall be stabilized with mulch and temporary seeding.
e) Any disturbed areas remaining idle for 30 days shall be stabilized with permanent vegetation.
f) Erosion and sediment control measures shall be inspected at least weekly, after each rain, and repaired as necessary.
g) Additional erosion and sediment control measures shall be installed if determined necessary by on-site inspection.
h) Silt fence shall meet the requirements of Section 171 - Type C temporary silt fence, of the Georgia Department of Transportation Standard Specifications, 1993 edition, and be wire reinforced.
i) The property owner and contractor are equally responsible for all erosion control activities.
j) It is the responsibility of the contractor to obtain qualified professional advice when questions arise concerning design and effectiveness of erosion control devices, not the City of Atlanta.
k) All temporary and permanent seeding must be performed at the appropriate season. In such instances where the establishment of vegetation is inopportune due to season or drought, disturbed areas shall be temporarily stabilized using 2"-4" of mulch (Ds1). Additional plantings will be necessary if a sufficlent stand of grass fails to grow.
l) The City's designee will verify adequate cover (100% cover, 70% density) of permanent stabilization (Ds3, Ds4).
m) Silt fences shall not be placed in stream buffer or floodplains, unless utilized for the construction of an exempt activity (i.e. roadway drainage structures, sewer/water crossings, or drainage structures) per the approved plans. For such disturbances within the buffer, the area shall be immediately stabilized using erosion control matting and/or blankets once the activity is complete.
n) n/a
o) Sediment storage volume @ 67 cy/acre must be installed prior to any other land disturbance activity and in place until final stabilization occurs.
p) For each site on which land disturbing activity occurs, each entity or person acting as either a primary, secondary, or tertiary permittee, as defined in the state general permit, shall have as a minimum one person who is in responsible charge of erosion and sedimentation control activities on behalf of said entity or person and meets the applicable (Level 1A) education or training certification requirements (O.C.G.A. 12-7-19(a)(2)).
q) Subcontractors involved with land disturbance activities shall meet the education requirements (Level 1) described in O.C.G.A 12-7-19.

Erosion and Sediment Control Coding Legend from the Manual for Erosion and Sediment Control in Georgia

- Du — Dust Control
- Ds1 — Disturbed Area Stabilization (with mulching only)
- Ds2 — Disturbed Area Stabilization (with temporary seeding)
- Ds3 — Disturbed Area Stabilization (with permanent vegetation)
- Co — Construction Exit
- Sd1-C — Sediment Barrier

Matthew A Wilder, ASLA, LEED AP
GSWCC # 0000015143, Expires 08/18/2012

POND | ECOS
834 INMAN VILLAGE PARKWAY
SUITE 100
ATLANTA, GEORGIA 30307
(V) 404-221-1900 (F) 404-215-9111

COPYRIGHT © 2011 BY POND & COMPANY. ALL RIGHTS RESERVED. NO COPYING OR DUPLICATION OF THESE DOCUMENTS IS ALLOWED WITHOUT THE EXPRESS WRITTEN AGREEMENT OF POND & COMPANY

Louise G. Howard Park

471 Collier Road NW, Atlanta Ga 30318
Fulton County, Atlanta GA Land Lot 146, 17th District

GEORGIA REGISTERED LANDSCAPE ARCHITECT MATTHEW WILDER 12/01/11

REVISIONS

SHEET TITLE
ES and PC Intermediate Phase

DESIGNED BY	FILE NAME
DRAWN BY T.P.	SHEET L402
CHECKED BY	
PROJECT NO. 1110295	
DATE	

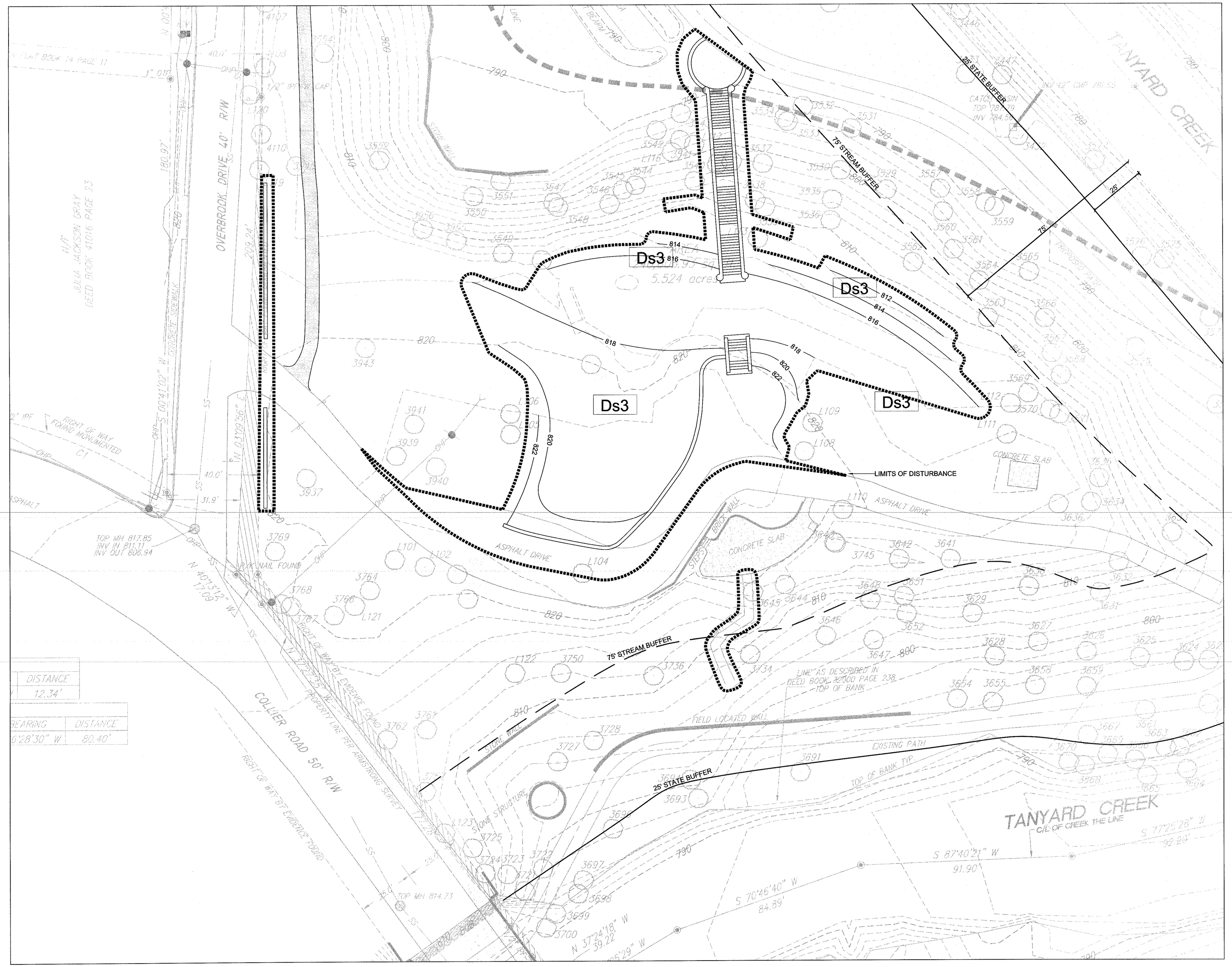

Land Lot 146, 17th District
Landscape improvements - Upgrades and physical improvements to create a park with an open lawn, staircase, paths and pavilion.

Howard Park
471 Collier Rd NW
Atlanta, Georgia 30318

24 Hour Local Contact: Pat Katz
P: 404-546-6589

City of Atlanta
Department of Parks, Recreation, and Cultural Affairs
Harris Tower, Suite 1600
233 Peachtree St
Altanta, Georgia 30308

Patricia K. Katz, Landscape Architect, RLA
404-546-6589, PKatz@AtlantaGA.gov
Harris Tower, Suite 1600
233 Peachtree St
Altanta, Georgia 30308

Total Site Size: 5.52 Acres
Total Area of Disturbance: .53 Acres

SOILS:
CpA- Congaree sandy loam, 0 to 2 percent slopes, occasionally flooded
UfC2- Urban land-Cecil complex, 2 to 10 percent slopes, moderately eroded
UrE- Urban land-Rion complex, 10 to 25 percent slopes

Construction Activity Schedule

ACTIVITY SCHEDULE: APRIL, 2012 - JULY, 2012

ACTIVITY / WEEK	1	2	3	4	5	6	7	8	9	10	11	12
SEDIMENT CONTROL												
DEMOLITION												
TEMPORARY GRASSING												
GRADING												
MAINTENANCE OF EROSION CONTROL												
SITE CONSTRUCTION												
CLEARING AND GRUBBING												
REMOVAL OF ES & PC DEVICES												
FINAL CLEAN-UP/ DE-MOBILIZE												

NOTES:
a) Prior to land-disturbing activities, the Contractor shall schedule a pre-construction meeting with the area Erosion Control inspector. Call (404) 546-1300 to contact the inspector.
b) The escape of sediment from the site shall be prevented by the installation of erosion and sediment control measures and practices prior to, or concurrent with, land disturbing activities.
c) Erosion control measures will be maintained at all times. If full implementation of the approved plan does not provide for effective erosion control, additional erosion and sediment control measures shall be implemented to control or treat the sediment source.
d) Any disturbed area left exposed for a period greater than 14 days shall be stabilized with mulch and temporary seeding.
e) Any disturbed areas remaining idle for 30 days shall be stabilized with permanent vegetation.
f) Erosion and sediment control measures shall be inspected at least weekly, after each rain, and repaired as necessary.
g) Additional erosion and sediment control measures shall be installed if determined necessary by on-site inspection.
h) Silt fence shall meet the requirements of Section 171 - Type C temporary silt fence, of the Georgia Department of Transportation Standard Specifications, 1993 edition, and be wire reinforced.
i) The property owner and contractor are equally responsible for all erosion control activities.
j) It is the responsibility of the contractor to obtain qualified professional advice when questions arise concerning design and effectiveness of erosion control devices, not the City of Atlanta.
k) All temporary and permanent seeding must be performed at the appropriate season. In such instances where the establishment of vegetation is inopportune due to season or drought, disturbed areas shall be temporarily stabilized using 2"-4" of mulch (Ds1). Additional plantings will be necessary if a sufficient stand of grass fails to grow.
l) The City's designee will verify adequate cover (100% cover, 70% density) of permanent stabilization (Ds3, Ds4).
m) Silt fences shall not be placed in stream buffer or floodplains, unless utilized for the construction of an exempt activity (i.e. roadway drainage structures, sewer/water crossings, or drainage structures) per the approved plans. For such disturbances within the buffer, the area shall be immediately stabilized using erosion control matting and/or blankets once the activity is complete.
n) n/a
o) Sediment storage volume @ 67 cy/acre must be installed prior to any other land disturbance activity and in place until final stabilization occurs.
p) For each site on which land disturbing activity occurs, each entity or person acting as either a primary, secondary, or tertiary permittee, as defined in the state general permit, shall have as a minimum one person who is in responsible charge of erosion and sedimentation control activities on behalf of said entity or person and meets the applicable (Level 1A) education or training certification requirements (O.C.G.A. 12-7-19(a)(2)).
q) Subcontractors involved with land disturbance activities shall meet the education requirements (Level 1) described in O.C.G.A 12-7-19.

Erosion and Sediment Control Coding Legend from the Manual for Erosion and Sediment Control in Georgia

- Du — Dust Control
- Ds1 — Disturbed Area Stabilization (with mulching only)
- Ds2 — Disturbed Area Stabilization (with temporary seeding)
- Ds3 — Disturbed Area Stabilization (with permanent vegetation)
- Co — Construction Exit
- Sd1-C — Sediment Barrier

Matthew A Wilder, ASLA, LEED AP
GSWCC # 0000015143, Expires 08/18/2012

POND ECOS
POND J ECOS
834 INMAN VILLAGE PARKWAY
SUITE 100
ATLANTA, GEORGIA 30307
(V) 404-221-1900 (F) 404-215-9111

COPYRIGHT © 2011 BY POND & COMPANY. ALL RIGHTS RESERVED. NO COPYING OR DUPLICATION OF THESE DOCUMENTS IS ALLOWED WITHOUT THE EXPRESS WRITTEN AGREEMENT OF POND & COMPANY

Louise G. Howard Park

471 Collier Road NW, Atlanta Ga 30318
Fulton County, Atlanta GA Land Lot 146, 17th District

GEORGIA REGISTERED LANDSCAPE ARCHITECT MATTHEW WILDER
12/01/11

REVISIONS

SHEET TITLE
ES and PC Final Phase

DESIGNED BY	FILE NAME
DRAWN BY T.P.	SHEET L403
CHECKED BY	
PROJECT NO. 1110295	
DATE	

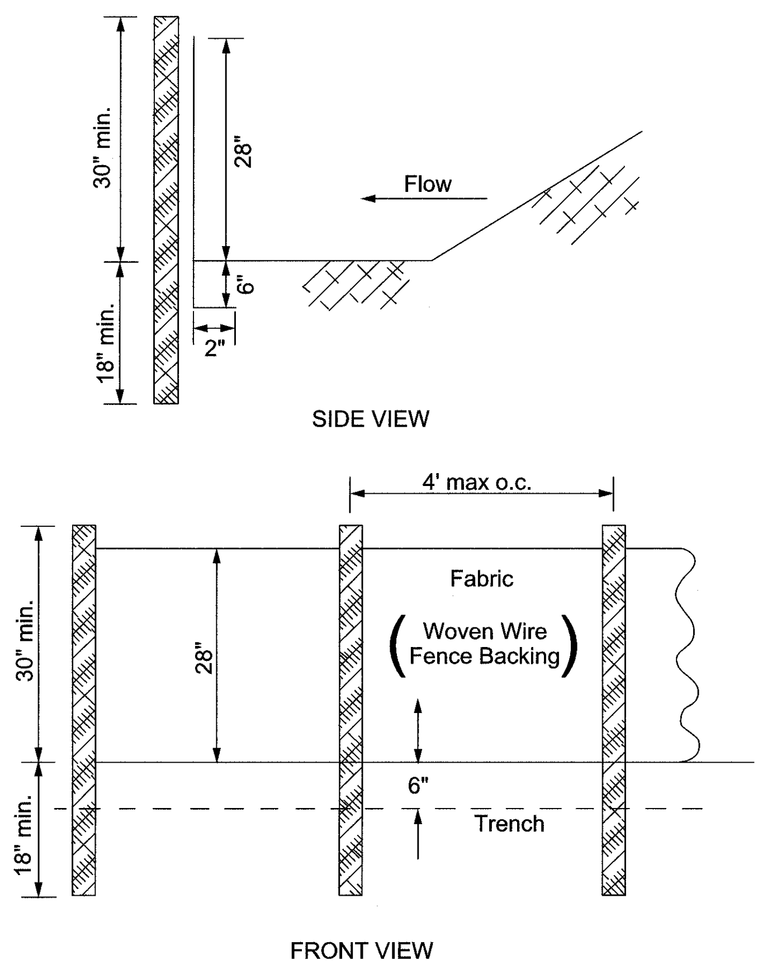

NOTE:
Use 36" D.O.T. approved fabric.
Use steel posts.- only

SILT FENCE - TYPE C

Figure 6-20.6

Silt fence storage volume is calculated based upon published US Forest Service findings in the General Technical Report RMRS-GTR-94 "Silt Fences: An Economical Technique for Measuring Hillslope Soil Erosion". Appendix A provides Silt Fence Storage capacity based upon silt fence height, width and slope of the land behind the fence.

Storage volumes provided on sheet L405 are conservative. Volumes are based upon the average cubic foot storage volume per linear foot of silt fence that is 2.0' tall and assuming an average slope of 30% behind the fence.

These noted storage capacities do not excuse the contractor from removing accumulated silt from behind the fence when the silt reaches half the height of the fence, however the capacities indicate the fence can store much greater volumes of silt that those of just the clean-out level, in the event of a large storm which may cause significant runoff and silt accumulation.

The project scope consists of landscape and park improvements to the former Howard Residence property. Previously a single family home, since demolished the property is now being redeveloped into a passive park for neighborhood residents to use and enjoy. **Less than 5000 square feet of new impervious surfaces are being added to the site and less than 1 acre of land disturbance will be made during construction of the new improvements.**

The site will experience a small earthmoving exercise to create an open level lawn are for passive recreational use. The grading of the site is balanced, and will be stabilized with turfgrass sod and other landscape plants immediately upon completion of the earthwork grading. Due to the orientation of the site and the limited amount of exposure expected, it is not reasonable to install a temporary sediment basin, therefore Type C silt fence will be utilized to store sediment, as is allowed as an "equivalent control measure".

As is required by Permit No. GAR100001 the silt fence shall have silt removed when accumulation reaches one third full, in order to restore the original storage volume of the equivalent control measure. Sediment shall be disposed of properly. Temporary sediment barriers shall remain in place until disturbed areas have been permanently stabilized (100% cover and 70% density).

Appendix A—Volume of Silt Fence Storage Capacity For Various Configurations of Ground Surface Slope, Silt Fence Height, and Width

Silt fence		Silt fence maximum holding capacities (ft³) Ground surface slope (%)													
Height ft	Width ft	5	10	15	20	25	30	35	40	45	50	55	60	65	70
1.5	10	177	88	59	44	35	29	25	22	20	18	16	15	14	13
1.5	20	353	177	118	88	71	59	50	44	39	35	32	29	27	25
1.5	30	530	265	177	133	106	88	76	66	59	53	48	44	41	38
1.5	40	707	353	236	177	141	118	101	88	79	71	64	59	54	50
1.5	50	884	442	295	221	177	147	126	110	98	88	80	74	68	63
2.0	10	314	157	105	79	63	52	45	39	35	31	29	26	24	22
2.0	20	628	314	209	157	126	105	90	79	70	63	57	52	48	45
2.0	30	942	471	314	236	188	157	135	118	105	94	86	79	72	67
2.0	40	1,257	628	419	314	251	209	180	157	140	126	114	105	97	90
2.0	50	1,571	785	524	393	314	262	224	196	175	157	143	131	121	112
2.5	10	491	245	164	123	98	82	70	61	55	49	45	41	38	35
2.5	20	982	491	327	245	196	164	140	123	109	98	89	82	76	70
2.5	30	1,473	736	491	368	295	245	210	184	164	147	134	123	113	105
2.5	40	1,963	982	654	491	393	327	280	245	218	196	178	164	151	140
2.5	50	2,454	1,227	818	614	491	409	351	307	273	245	223	205	189	175

Silt fence		Silt fence maximum holding capacities (m³) Ground surface slope (%)													
Height (m)	Width (m)	5	10	15	20	25	30	35	40	45	50	55	60	65	70
0.45	3	5	2	2	1	1	1	1	1	1	0.5	0.5	0.5	0.5	0.5
.45	6	10	5	3	2	2	2	1	1	1	1	1	1	1	1
.45	9	14	7	5	4	3	2	2	2	2	1	1	1	1	1
.45	12	19	10	6	5	4	3	3	2	2	2	2	2	1	1
.45	15	24	12	8	6	5	4	3	3	3	2	2	2	2	2
.60	3	8	4	3	2	2	1	1	1	1	1	1	1	1	1
.60	6	17	8	6	4	3	3	2	2	2	2	2	1	1	1
.60	9	25	13	8	6	5	4	4	3	3	3	2	2	2	2
.60	12	34	17	11	8	7	6	5	4	4	3	3	3	3	2
.60	15	42	21	14	11	8	7	6	5	5	4	4	4	3	3
.75	3	13	7	4	3	3	2	2	2	1	1	1	1	1	1
.75	6	27	13	9	7	5	4	4	3	3	3	2	2	2	2
.75	9	40	20	13	10	8	7	6	5	4	4	4	3	3	3
.75	12	53	27	18	13	11	9	8	7	6	5	5	4	4	4
.75	15	66	33	22	17	13	11	9	8	7	7	6	6	5	5

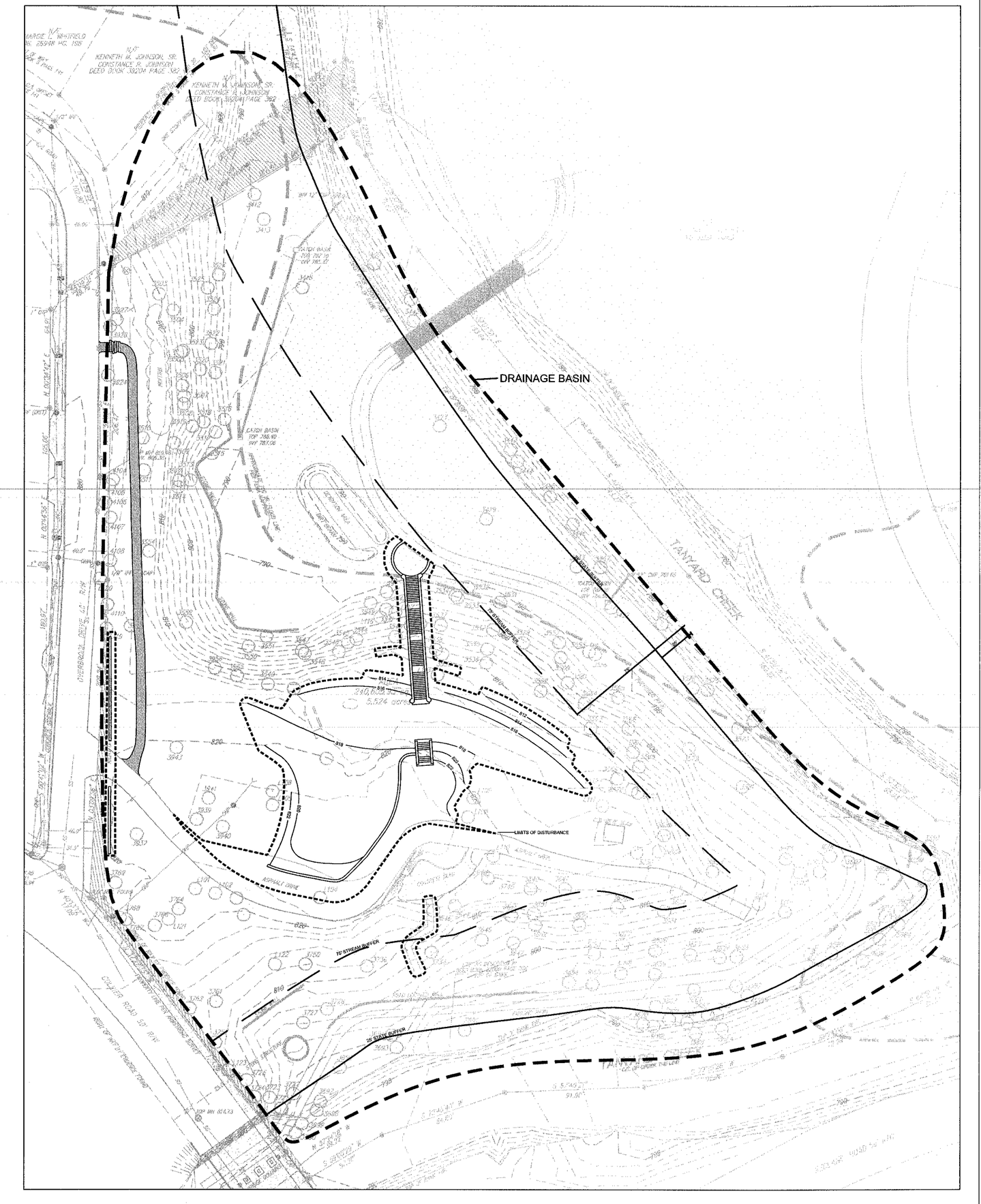

DRAINAGE BASIN
SCALE: 1" = 30'

POND ECOS
POND | ECOS
834 INMAN VILLAGE PARKWAY
SUITE 100
ATLANTA, GEORGIA 30307
(V) 404-221-1900 (F) 404-215-9111

COPYRIGHT © 2011 BY POND & COMPANY. ALL RIGHTS RESERVED. NO COPYING OR DUPLICATION OF THESE DOCUMENTS IS ALLOWED WITHOUT THE EXPRESS WRITTEN AGREEMENT OF POND & COMPANY

Louise G. Howard Park

471 Collier Road NW, Atlanta Ga 30318
Fulton County, Atlanta GA Land Lot 146, 17th District

GEORGIA REGISTERED LANDSCAPE ARCHITECT NO. 1386 MATTHEW WILDER 4/01/11

REVISIONS

SHEET TITLE
ES and PC Details

DESIGNED BY	FILE NAME
DRAWN BY T.P.	SHEET L404
CHECKED BY	
PROJECT NO. 1110295	
DATE	

ESPCP GENERAL NOTES:
The escape of sediment from the site shall be prevented by the installation of erosion and sediment control measures and practices prior to, or concurrent with, land disturbing activities. Erosion control measures will be maintained at all times. If full implementation of the approved plan does not provide for effective erosion control, additional erosion and sediment control measures shall be implemented to control or treat the sediment source.

PLAN ALTERATIONS
The Erosion Sedimentation and Pollution Control Plan (ESPCP) addresses the staged construction of the project based on common construction methods and techniques. If the Contractor elects to alter the stage construction from that shown in the plans or utilize construction techniques that render this plan ineffective, the Contractor shall revise the plans and obtain approval for revisions.
The Contractor shall carefully evaluate this plan prior to commencing land disturbing activities. A major modification or deletion of structural BMP's with a hydraulic component requires a formal revision of the ESPCP and the signature of a GSWCC level-II-certified design professional. Amendments/ Revisions to the ES and PC plan which have a significant effect on BMPs with a hydraulic component must be certified by the design professional and subsequently approved as a revision by Site Development Staff.

TEMPORARY MULCHING
EPD General Permit GAR 100001 states that "Any disturbed area left exposed for a period greater than 14 days shall be stabilized with mulch or temporary seeding." – However, the Department typically requires disturbed areas to be stabilized every 7 days. The construction documents, special provisions, or specifications may require mulching more often than 7 days.

VEGETATION AND PLANTING SCHEDULE
All temporary and permanent vegetative practices including plant species, planting dates, seeding fertilizer, lime and mulching rates for this project can be found in plans and specifications.

SEQUENCE OF MAJOR ACTIVITIES
The Contractor is responsible for developing the construction schedule for the project. The construction schedule for this project shall be submitted with the NOI. A copy of the construction schedule shall be maintained at the project site.

Prior to landscape bed preparation activities the Contractor shall install Silt Fence as indicated on the plans. Silt fence shall remain in place until the landscape material has been installed, the landscape beds have been mulched, and the landscape has begun to establish substantial root growth.

PETROLEUM STORAGE, SPILLS AND LEAKS
The plans provided herein do not anticipate the storage of petroleum products onsite. The Contractor shall at a minimum provide an action plan and keep the necessary materials on site for the capture and disposal of any petroleum product leaks or spills associated with the servicing, refueling or operation of any equipment utilized in the work. A copy of the action plan shall be submitted to the Project Engineer and maintained on the project site. All personnel operating or servicing equipment shall be familiar with this plan. The Contractor shall not park, refuel, or maintain equipment within stream buffers.
If the Contractor elects to store petroleum products on site, the Contractor shall prepare an ESPCP addendum that addresses the additional BMPs needed for onsite storage and spill prevention for petroleum products. This plan shall be prepared by a Certified Design Professional as required by GAR100001 for inclusion with these plans.

SOIL SERIES INFORMATION
The following is a summary of the soils that are expected to be found on the project site:
CpA Congaree sandy loam, 0 to 2 percent slopes, occasionally flooded
UfC2 Urban land-Cecil complex, 2 to 10 percent slopes, moderately eroded
UrE Urban land-Rion complex, 10 to 25 percent slopes

POST-CONSTRUCTION BMP'S
All permanent, post-construction BMP's are shown in the construction plans and in the ESPCP plan. The post-construction BMP's for this project consist of permanent vegetation. The post-construction BMP's will provide permanent stabilization of the site and prevent accelerated transportation of sediment and pollutants into receiving waters.

SILT FENCE INSTALLATIONS WITH J-HOOKS AND SPURS
Silt fence should never be run continuously. The silt fence should turn back into the fill or slope to create small pockets that trap silt and force stormwater to flow through the silt fence. This technique, or configuration, is commonly referred to as J-hooks or spurs. The J-hooks shall be utilized on all silt fences that are located around the perimeter of the project and along the toe of embankments or slopes. The J-hooks shall be spaced in accordance with the Typical Location Details for silt fences/baled straw. Spacing for J-hooks shall not be less than 50 feet except as noted. Silt fences that are near the outlet of culverts, cross drains, and storm drains shall have a minimum of three (3) J-Hooks on both sides of the structure at spacing not to exceed 30 feet. J-Hooks shall be paid for as silt fence items per foot. All costs and other incidental items are included in cost of installing and maintaining the silt fence.

MAINTENANCE AND STABILIZATION MEASURES
All stabilization measures shall be initiated as soon as practicable in portions of the site where construction activities have temporarily or permanently ceased but in no case more than 14 days after the construction activity in that portion of the site has temporarily or permanently ceased.

Where the initiation of stabilization measures by the 14th day after construction activity temporarily or permanently ceases is precluded by snow cover or other adverse weather conditions, stabilization measures shall be initiated as soon as practicable.

Where construction activity will resume on a portion of the site a minimum of 21 days from when activities ceased (e.g. the total time period that construction is ceased is less than 21 days) then stabilization measures do not have to be initiated on that portion of the site by the 14th day after construction activity is temporarily ceased.

WASTE DISPOSAL
Where attainable, locate waste collection areas, dumpsters, trash cans and portable toilets at least 50 feet away from streets, gutters, watercourses and storm drains. Secondary containment shall be provided around liquid waste collection areas to minimize the likelihood of contaminated discharges. The Contractor shall comply with applicable state and local waste storage and disposal regulations and obtain all necessary permits. Solid materials, including building materials, shall not be discharged to Waters of the State, unless authorized by a Section 404 Permit.

INSPECTIONS
All inspections shall be documented on the appropriate inspection forms. These inspections shall continue until the Notice of Termination (NOT) is submitted.
Failure to perform inspections as required by the contract documents and the NPDES permit shall result in the cessation of all construction activities with the exception of Traffic Control and Erosion Control. Continued failure to perform inspections shall result in non-refundable deductions as specified in the contract documents.
The Design Professional will be responsible to inspect the installation of the initial sediment storage requirements and perimeter control BMPs which the design professional designed within seven (7) days after installation.The Design Professional shall determine if these BMPs have been installed and are being maintained as designed. The Project Engineer shall report the results of the inspection to the primary permittee within seven (7) days and the permittee must correct all deficiencies within two (2) business days of receipt of the inspection report from the Project Engineer unless weather related site conditions are such that additional time is required.
PERMITTEE REQUIREMENTS
(1). Each day when any type of construction activity has taken place at a primary permittee's site, certified personnel provided by the primary permittee shall inspect: (a) all areas at the primary permittee's site where petroleum products are stored, used, or handled for spills and leaks from vehicles and equipment; (b) all locations at the primary permittee's site where vehicles enter or exit the site for evidence of off-site sediment tracking; and (c) measure rainfall once each 24 hour period at the site. These inspections must be conducted until a Notice of Termination is submitted.

(2). Certified personnel (provided by the primary permittee) shall inspect the following at least once every seven (7) calendar days and within 24 hours of the end of a storm that is 0.5 inches rainfall or greater (unless such storm ends after 5: 00 PM on any Friday or on any non-working Saturday, non-working Sunday or any non-working Federal holiday in which case the Inspection shall be completed by the end of the next business day and/or working day, whichever occurs first): (a) disturbed areas of the primary permittee's construction site that have not undergone final stabilization; (b) areas used by the primary permittee for storage of materials that are exposed to precipitation that have not undergone final stabilization; and (c) structural control measures.

Erosion and sediment control measures identified in the Plan applicable to the primary permittee's site shall be observed to ensure that they are operating correctly. Where discharge locations or points are accessible, they shall be inspected to ascertain whether erosion control measures are effective in preventing significant impacts to receiving water(s). For areas of a site that have undergone final stabilization, the permittee must comply with Part IV.D.4.a.(3). These inspections must be conducted until a Notice of Termination is submitted.

(3). Certified personnel (provided by the primary permittee) shall inspect at least once per month during the term of this permit (i.e., until a Notice of Termination is received by EPD) the areas of the site that have undergone final stabilization. These areas shall be inspected for evidence of, or the potential for, pollutants entering the drainage system and the receiving water(s). Erosion and sediment control measures identified in the Plan shall be observed to ensure that they are operating correctly. Where discharge locations or points are accessible, they shall be inspected to ascertain whether erosion control measures are effective in preventing significant impacts to receiving water(s).

(4). Based on the results of each inspection, the site description and the pollution prevention and control measures identified in the Erosion, Sedimentation and Pollution Control Plan, the Plan shall be revised as appropriate not later than seven (7) calendar days following each inspection. Implementation of such changes shall be made as soon as practical but in no case later than seven (7) calendar days following each inspection
.
(5). A report of each inspection that includes the name(s) of personnel making each inspection, the date(s) of each inspection, major observations relating to the implementation of the Erosion, Sedimentation and Pollution Control Plan, and actions taken in accordance with Part IV.D.4.a.(4). of the permit shall be made and retained at the site or be readily available at a designated alternate location until the entire site or that portion of a construction project that has been phased has undergone final stabilization and a Notice of Termination is submitted to EPD. Such reports shall identify any incidents of non-compliance. Where the report does not identify any incidents of non-compliance, the report shall contain a certification that the construction site is in compliance with the Erosion, Sedimentation and Pollution Control Plan and this permit. The report shall be signed in accordance with Part V.G. of this permit.

NON-STORM WATER DISCHARGES
Non-storm water discharges defined in Part III.A.2 of the NPDES Permit will be identified after construction has commenced. These discharges shall be subject to the same requirements as storm water discharges required by the Georgia Erosion and Sedimentation Control Act, the NPDES Permit, the Clean Water Act, the Manual for Erosion and Sediment Control in Georgia, Department Standards, and contract documents.

DE-WATERING ACTIVITIES AND USE OF PUMPS
Any pumped discharge from an excavation or disturbed area shall be routed through an appropriately sized sediment basin, silt filter bag or shall be treated equivalently with suitable BMP's. The contractor shall ensure the post BMP treated discharge is sheet flowing. Failure to create sheet flow will obligate the contractor to perform water quality sampling of their pumped discharges. The contractor shall prepare sampling plans in accordance with the current GAR100001 NPDES permit utilizing by a Certified Design Professional. No separate payment will be made for water quality sampling of pump discharges.

SEDIMENT STORAGE
Table 1 summarizes the required and available sediment storage for every outfall on this project. The Contractor shall provide and maintain the storage volumes for the BMPs specified in table 1.

Sediment basins will not be installed for this project because the installation of sediment basins would require a greater area of disturbance. The site will be prepared and planted with permanent vegetation and mulched. Therefore sediment barriers should be adequate in controlling sediment with proper installation and maintenance.

(SEE TABLE 1)

DISCHARGES INTO, OR WITHIN ONE LINEAR MILE UPSTREAM OF AND WITHIN THE SAME WATERSHED AS, ANY PORTION OF A BIOTA IMPAIRED STREAM SEGMENT

All outfalls are either located further than 1 linear mile upstream or outside of the watershed of an Impaired Stream Segment that has been listed for criteria violated, "Bio F" (impaired Fish Community) and/or "Bio M" (Impaired Macro invertebrate Community), within Category 4a, 4b or 5, and the potential cause is either "NP" (nonpoint source) or "UR" (urban runoff).

STREAM BUFFER ENCROACHMENT
Stream Buffers are not impacted by this project.

MONITORING SAMPLING METHODS & PROCEDURES
See Special Provision 167 and other contract documents for Monitoring Sampling Methods and Procedures.

(SEE TABLE 2)

Sampling by the permittee shall occur for the following events:
(a). For each area of the site that discharges to a receiving stream, the first rain event that reaches or exceeds 0.5 inch and allows for monitoring during normal business hours* (Monday thru Friday, 8:00 AM to 5:00 PM and Saturday 8:00 AM to 5: 00 PM, excluding all non-working Federal holidays, when construction activity is being conducted by the primary permittee) that occurs after all clearing and grubbing operations have been completed in the drainage area of the location selected as the sampling location;
(b). In addition to (a) above, for each area of the site that discharges to a receiving stream, the first rain event that reaches or exceeds 0.5 inch and allows for monitoring during normal business hours* that occurs either 90 days after the first sampling event or after all mass grading operations have been completed in the drainage area of the location selected as the sampling location, whichever comes first;
(c). At the time of sampling performed pursuant to (a) and (b) above, if BMPs are found to be properly designed, installed and maintained, no further action is required. If BMPs in any area of the site that discharges to a receiving stream are not properly designed, installed and maintained, corrective action shall be defined and implemented within two (2) business days, and turbidity samples shall be taken from discharges from that area of the site for each subsequent rain event that reaches or exceeds 0.5 inch during normal business hours* until the selected turbidity standard is attained, or until post-storm event inspections determine that BMPs are properly designed, installed and maintained; and
(d). Existing construction activities, i.e., those that are occurring on or before the effective date of this permit, that have met the sampling required by (a) above shall sample in accordance with (b). Those existing construction activities that have met the sampling required by (b) above shall not be required to conduct additional sampling other than as required by (c) above.
*Note that the permittee may choose to meet the requirements of (a) and (b) above by collecting turbidity samples from any rain event that reaches or exceeds 0.5 inch and allows for monitoring at any time of the day or week.

All sampling shall be collected by "grab samples" and the analysis of these samples must be conducted in accordance with methodology and test procedures established by 40 CFR Part 136 (unless other test procedures have been approved); the guidance document titled "NPDES Storm Water Sampling Guidance Document, EPA 833--B--92--001" and guidance documents that may be prepared by the EPD.
(1). Sample containers should be labeled prior to collecting the samples.
(2). Samples should be well mixed before transferring to a secondary container.
(3). Large mouth, well cleaned and rinsed glass or plastic jars should be used for collecting samples. The jars should be cleaned thoroughly to avoid contamination.
(4). Manual, automatic or rising stage sampling may be utilized. Samples required by this permit should be analyzed immediately, but in no case later than 48 hours after collection. However, samples from automatic samplers must be collected no later than the next business day after their accumulation, unless flow through automated analysis is utilized. Dilution of samples is not required. Samples may be analyzed directly with a properly calibrated turbidimeter. Samples are not required to be cooled.
(5). Sampling and analysis of the receiving water(s) or outfalls beyond the minimum frequency stated in this permit must be reported to EPD as specified in Part IV.E.

RECEIVING WATERS ARE TO BE SAMPLED UPSTREAM AND DOWNSTREAM OF THE PROJECT LOCATION. BOTH OF THESE LOCATIONS ARE EASILY ACCESIBLE IN INTRENCHMENT CREEK. REFER TO SITE LOCATION MAP ON CI FOR MONITORING LOCATIONS.
MONITORING GENERAL NOTES:

Representative sampling may be utilized on this project. The characteristics of the individual watersheds along the project corridor have been carefully evaluated and compared on the basis of drainage characteristics, watershed size, land disturbance and earth work. After evaluation of these items as presented in the projects drainage area maps, hydrology and hydraulic studies, construction plans and erosion sedimentation and pollution control plans, it has been determined that the increase in turbidity at the specified locations will be representative of the increase in turbidity for all waters leaving the site. Approved primary and alternate representative monitoring sites are identified in the table.

The primary site specified should be used as the initial sampling location. The alternate sampling sites may be used if additional sampling is required and/or if the primary sampling site is no longer located within the active phase of construction.

Retention of Records
1. The primary permittee shall retain the following records at the construction site or the records shall be readily available at a designated alternate location from commencement of construction until such time as a NOT is submitted in accordance with Part VI:
   a. A copy of all Notices of Intent submitted to EPD;
   b. A copy of the Erosion, Sedimentation and Pollution Control Plan required by this permit;
   c. The design professional's report of the results of the inspection conducted in accordance with Part IV.A.5. of this permit;
   d. A copy of all monitoring information, results, and reports required by this permit;
   e. A copy of all inspection reports generated in accordance with Part IV.D.4.a. of this permit;
   f. A copy of all violation summaries and violation summary reports generated in accordance with Part III.D.2. of this permit; and
   g. Daily rainfall information collected in accordance with Part IV.D.4.a.(1)(c) of this permit.
2. Copies of all Notices of Intent, Notices of Termination, reports, plans, monitoring reports, monitoring information, including all calibration and maintenance records and all original strip chart recordings for continuous monitoring instrumentation, Erosion, Sedimentation and Pollution Control Plans, records of all data used to complete the Notice of Intent to be covered by this permit and all other records required by this permit shall be retained by the permittee who either produced or used it for a period of at least three years from the date that the the NOT is submitted in accordance with Part VI of this permit. These records must be maintained at the permittee's primary place of business or at a designated alternative location once the construction activity has ceased at the permitted site. This period may be extended by request of the EPD at any time upon written notification to the permittee.

TABLE 1

Outfall ID	Total Drainage Area (acres)	Disturbed Area (acres)	Required Sediment Storage volume (cy)	Total Storage Volume provided (cy)	Silt Fence		Check Dam (cy each)		Inlet Sediment Traps (cy each)	
					Linear Feet	Total Volume	# of Devices	Total Volume	# of Devices	Total Volume
A	0.99	0.53	67	76	482	92	0		0	

TABLE 2

Monitoring Site	Primary or Alternate Site	Location	Name of Receiving water	Applicable Construction Stage for Monitoring	Sampling type (Outfall or Recieving water)	Drainage Area (for the Recieving water)	Project Area	Warm or Cold water stream	Appendix B NTU value (outfall monitoring only)	Allowable NTU increase (for receiving water)	Location Description
A	Primary	as shown	Tanyard Creek	all	receiving water	< 1 mile	5.52 ac	warm	N/A	75	stream

POND ECOS
POND | ECOS
834 INMAN VILLAGE PARKWAY
SUITE 100
ATLANTA, GEORGIA 30307
(V) 404-221-1900 (F) 404-215-9111
COPYRIGHT © 2011 BY POND & COMPANY. ALL RIGHTS RESERVED. NO COPYING OR DUPLICATION OF THIS DOCUMENT IS ALLOWED WITHOUT THE EXPRESS WRITTEN AGREEMENT OF POND & COMPANY

Louise G. Howard Park
471 Collier Road NW, Atlanta Ga 30318
Fulton County, Atlanta GA Land Lot 146, 17th District

GEORGIA REGISTERED LANDSCAPE ARCHITECT MATTHEW WILDER
12/9/11

REVISIONS

SHEET TITLE
ES and PC Notes

DESIGNED BY
DRAWN BY T.P.
CHECKED BY
PROJECT NO. 1110295
DATE
FILE NAME
SHEET L405

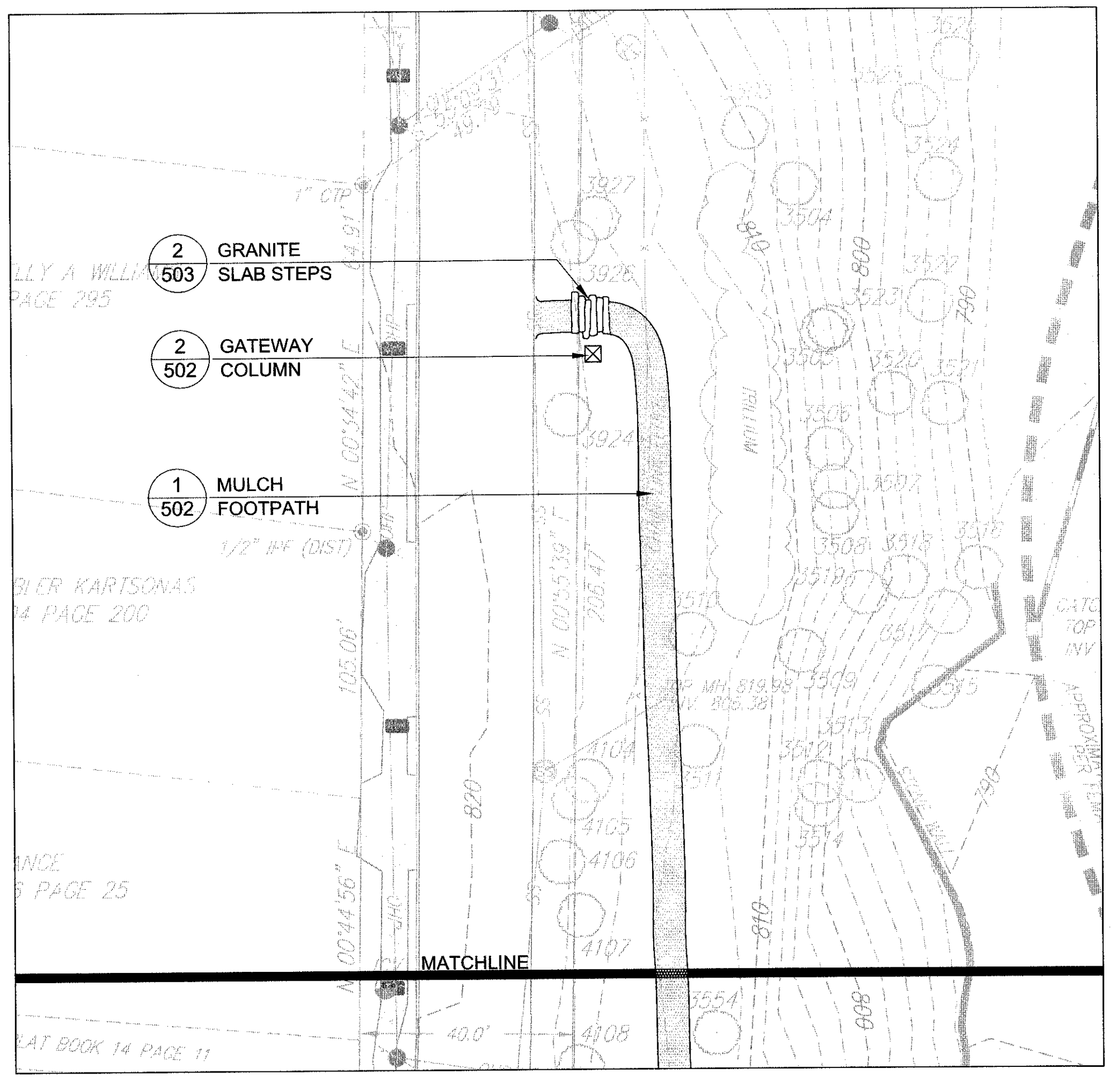

0' 10' 20' 40' 80'
Scale: 1" = 20'

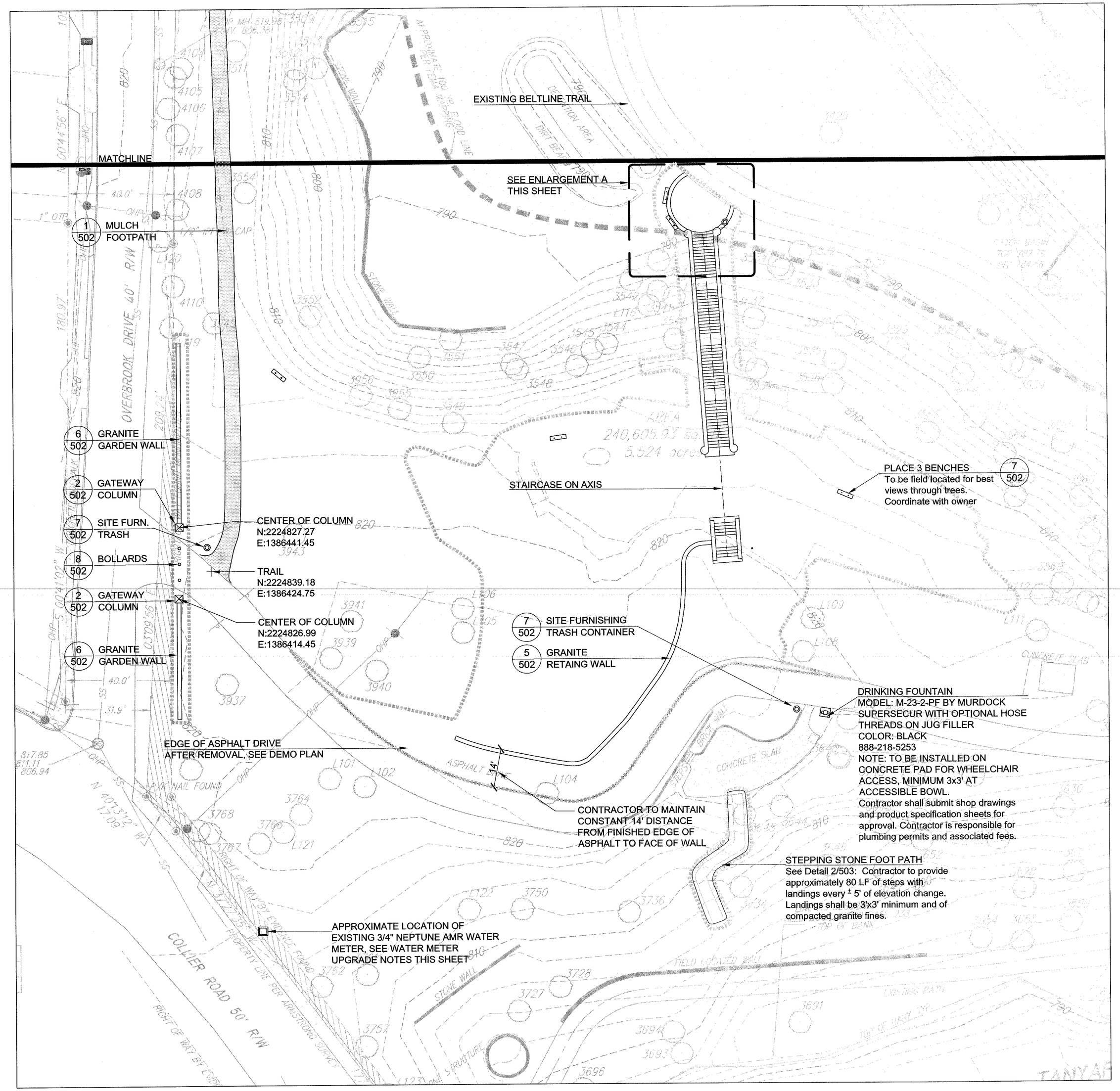

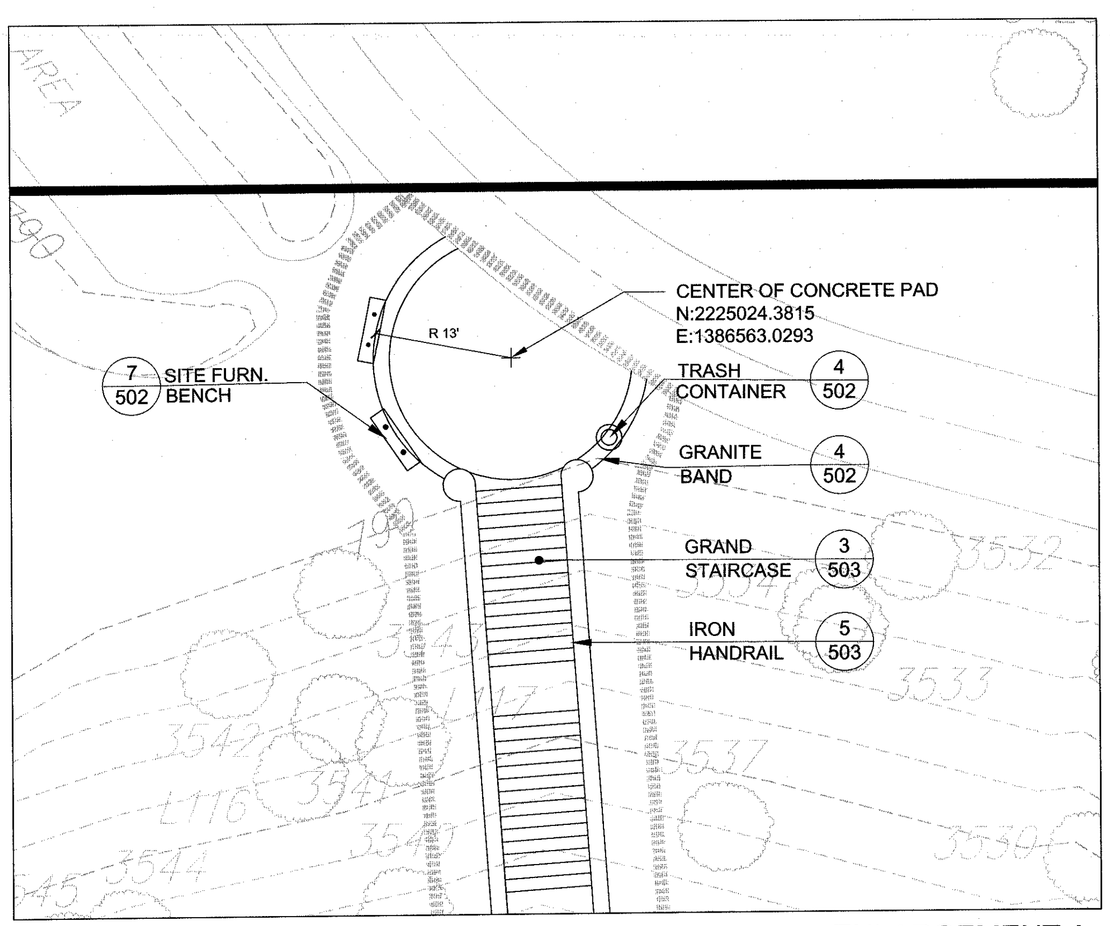

ENLARGEMENT A

0' 5' 10' 20' 40'
Scale: 1" = 10'

WATER METER UPGRADE NOTES:

1) Call the Utility Protection Center to locate the utilities. The telephone number is 800-282-7411.
2) Call a private company to locate the utilities in the park.
3) Have licensed plumber file for the installation of the Reduced Pressure Zone (RPZ) backflow preventer, with the Plumbing Department.
4) Increase the 3/4" copper off the water meter to 1" copper tubing, Type "K".
5) Install a 1" bronze property valve with female pipe threads, and stainless steel handle, Nibco Model # T-585-70. Install in a rectangle meter box, with gravel in the bottom of the box (vault). Carson meter box is one brand.
6) License plumber to install a 1" Watts Model #

0' 10' 20' 40' 80'
Scale: 1" = 20'

POND ECOS
POND | ECOS
834 INMAN VILLAGE PARKWAY
SUITE 100
ATLANTA, GEORGIA 30307
(V) 404-221-1900 (F) 404-215-9111

COPYRIGHT © 2011 BY POND & COMPANY. ALL RIGHTS RESERVED. NO COPYING OR DUPLICATION OF THESE DOCUMENTS IS ALLOWED WITHOUT THE EXPRESS WRITTEN AGREEMENT OF POND & COMPANY

Louise G. Howard Park

471 Collier Road NW, Atlanta Ga 30318
Fulton County, Atlanta GA Land Lot 146, 17th District

GEORGIA REGISTERED LANDSCAPE ARCHITECT MATTHEW WILDER 12/01/11

REVISIONS

SHEET TITLE
Layout Plan

DESIGNED BY	FILE NAME
DRAWN BY: T.P.	SHEET
CHECKED BY	L500
PROJECT NO. 1110295	
DATE	

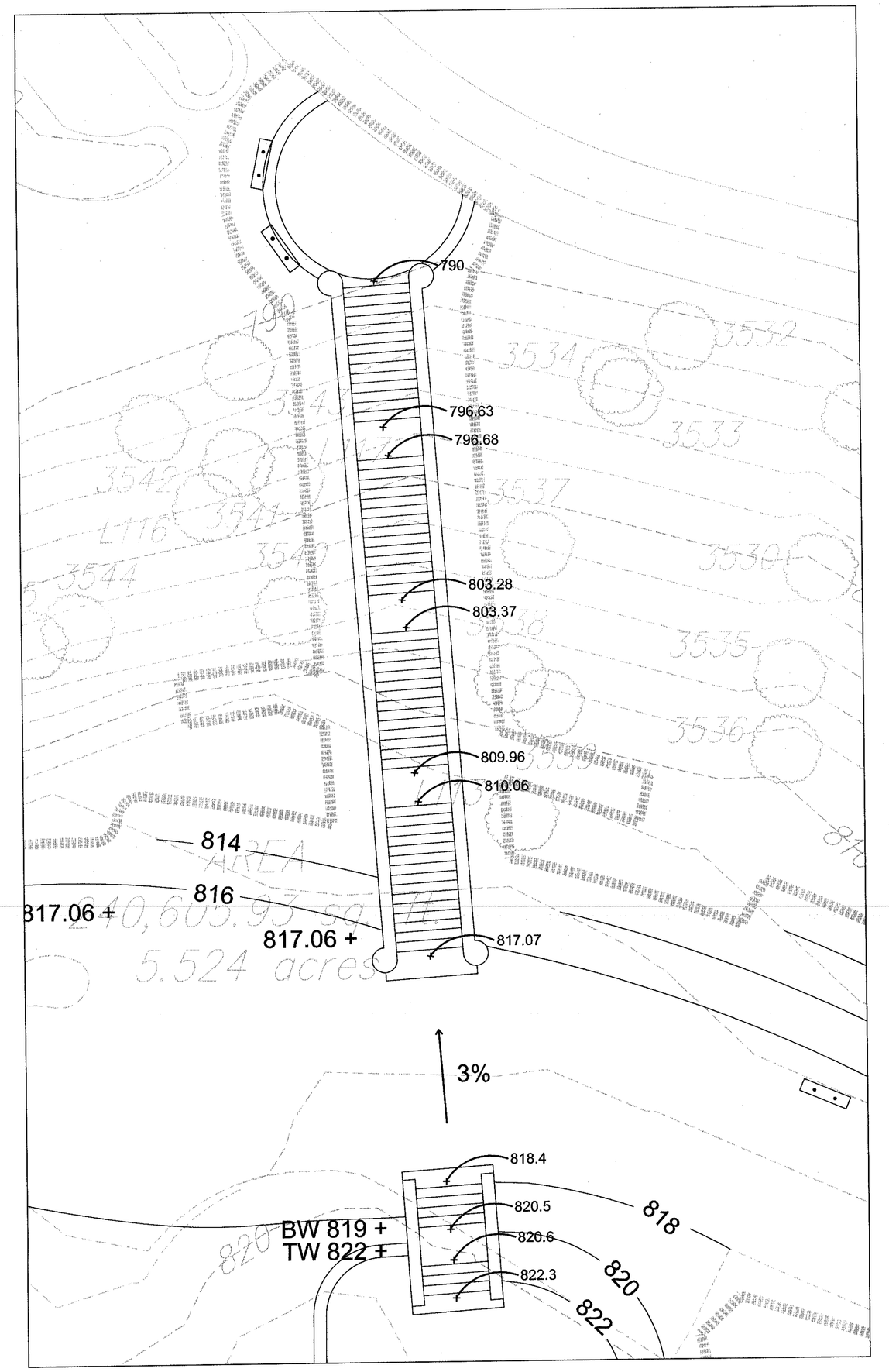

0' 5' 10' 20' 40'

Scale: 1" = 10'

NOTE: NO GRADED SLOPE TO EXCEED 2H:1V

THIS PROJECT IS NOT SHOWN TO BE LOCATED WITHIN A DESIGNATED FLOODPLAIN, AS PER FEMA MAP 13121C0242 E EFFECTIVE JUNE 22, 1998.

Dirt statement:		Demolition Debris:
Fill:	540 CY	Debris removed: 90 CY
Cut:	558 CY	Net Haul from site: 108 CY
Net Haul to site:	18 CY cut	

*NO HAUL ROUTE PERMIT REQUIRED

TOTAL AREA OF DISTURBANCE: .53 AC

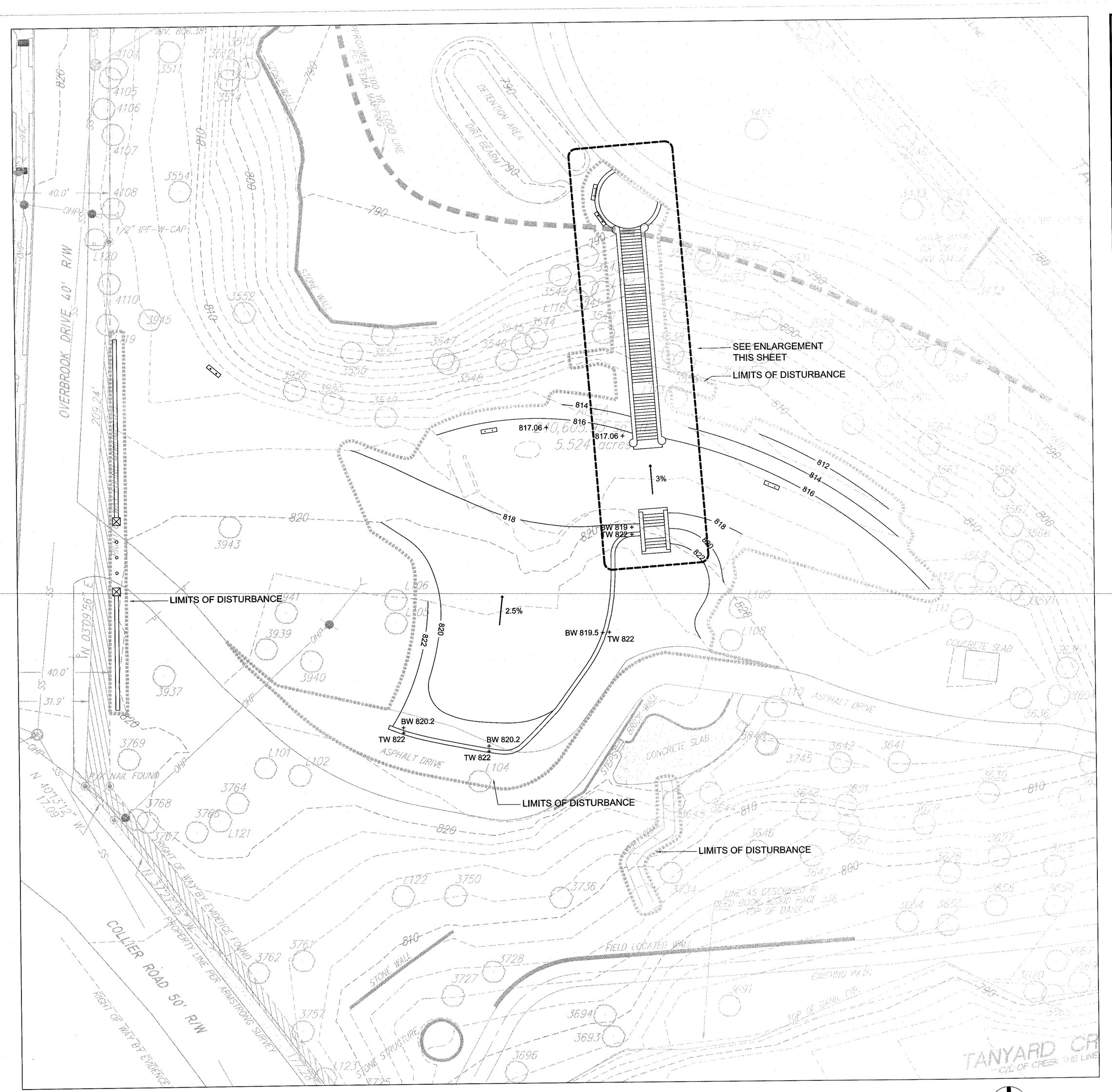

0' 10' 20' 40' 80'

Scale: 1" = 20'

COPYRIGHT © 2011 BY POND & COMPANY. ALL RIGHTS RESERVED. NO CONTENTS OF THESE DOCUMENTS IS ALLOWED WITHOUT THE EXPRESS WRITTEN AGREEMENT OF POND & COMPANY

POND ECOS
POND | ECOS
834 INMAN VILLAGE PARKWAY
SUITE 100
ATLANTA, GEORGIA 30307
(V) 404-221-1900 (F) 404-215-9111

Louise G. Howard Park

471 Collier Road NW, Atlanta Ga 30318

Fulton County, Atlanta GA Land Lot 146, 17th District

GEORGIA REGISTERED LANDSCAPE ARCHITECT MATTHEW WILDER 12/01/11

REVISIONS

SHEET TITLE

Grading Plan

DESIGNED BY	FILE NAME
DRAWN BY T.P.	SHEET
CHECKED BY	L501
PROJECT NO. 1110295	
DATE	

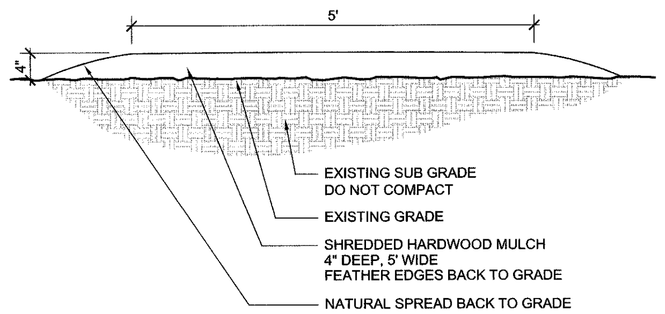

1 / 502 **Mulch Path**

3/4" = 1'-0"

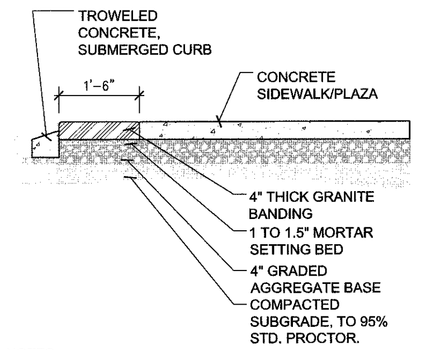

NOTES:
1. GRANITE SHALL HAVE A SPLIT FACE, HOWEVER FINISHED SURFACE SHALL BE LEVEL AND EVEN - SURFACE SHALL NOT VARY GREATER THAN $\frac{1}{4}$" FROM ADJACENT CONCRETE SURFACES.
2. GRANITE PIECES SHALL BE 6X18 TO 18X18 INCHES. INDIVIDUAL SHAPES SHALL BE APPROXIMATELY SQUARE OR RECTANGULAR.
3. MORTAR JOINTS SHALL BE $\frac{3}{8}$" TO $\frac{5}{8}$" WIDE.

4 / 502 **Granite Band**

1/2" = 1'-0"

DETAIL NOT USED

NOTES
1. 3/8" RAKED MORTAR JOINTS
2. MEDIUM GREY, GEORGIA GRANITE; CONTRACTOR TO PROVIDE GRANITE SAMPLES FOR APPROVAL
3. CONTRACTOR TO PROVIDE FULL HEIGHT BY 4' WIDE MOCK-UP FOR APPROVAL

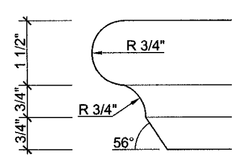

ENLARGEMENT

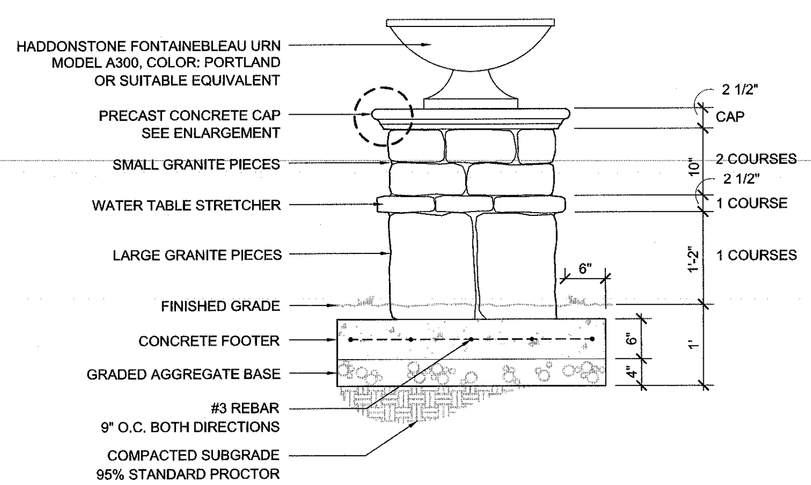

2 / 502 **Gateway Column Detail**

3/4" = 1'-0"

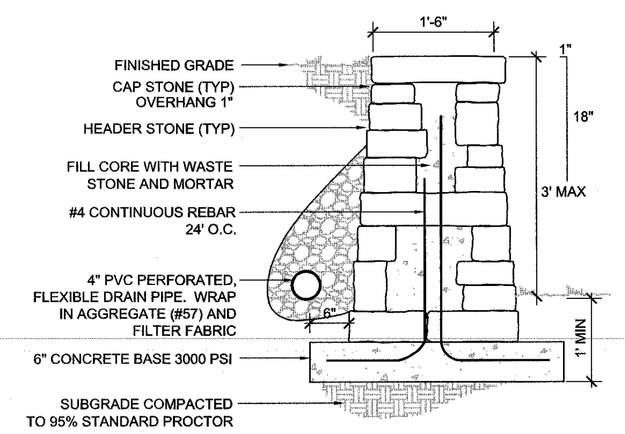

NOTES
1. 3/8" RAKED MORTAR JOINTS
2. MEDIUM GREY, GEORGIA GRANITE; CONTRACTOR TO PROVIDE GRANITE SAMPLES FOR APPROVAL
3. CONTRACTOR TO PROVIDE FULL HEIGHT BY 4' WIDE MOCK-UP FOR APPROVAL

5 / 502 **Granite Retaining Wall**

3/4" = 1'-0"

TRASH CONTAINER
VICTOR STANLEY SD-42
POWDERCOAT COLOR: BLACK
MOUNTING: SURFACE
OR APPROVED EQUAL

BOLLARD
MAGLIN MTB 203
POWDERCOAT COLOR: BLACK
BASE TYPE: TYPE 3 MTB 203
OR APPROVED EQUAL

BENCH
VICTOR STANLEY FBF-53
POWDERCOAT COLOR: BLACK
MOUNTING: IN GROUND
LENGTH: 6'
OR APPROVED EQUAL

PICNIC TABLE
VICTOR STANLEY FRST-6
POWDERCOAT COLOR: BLACK
MOUNTING: SURFACE
LENGTH: 8'
OR APPROVED EQUAL

7 / 502 **Site Furnishings**

3/4" = 1'-0"

DETAIL NOT USED

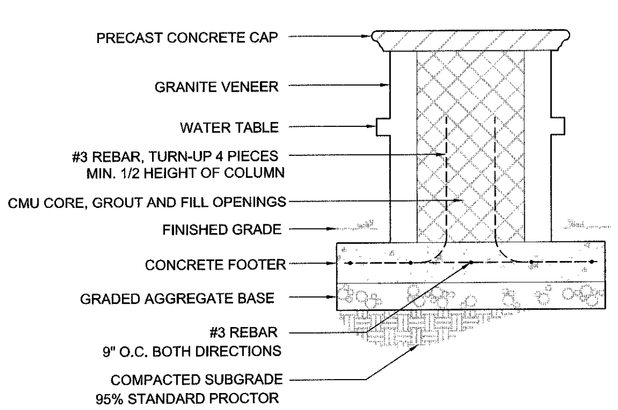

3 / 502 **Gateway Column Detail- Section**

3/4" = 1'-0"

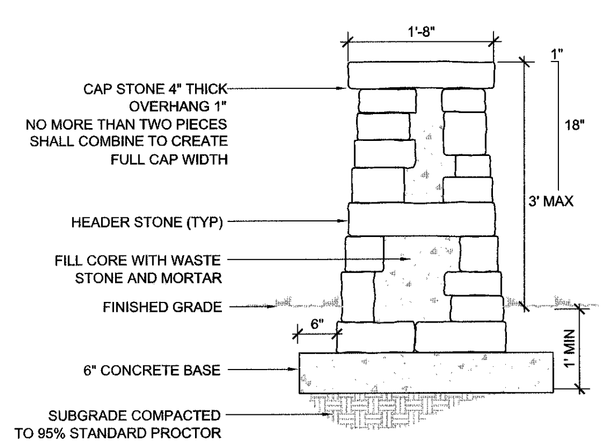

NOTES
1. 3/8" RAKED MORTAR JOINTS
2. MEDIUM GREY, GEORGIA GRANITE; CONTRACTOR TO PROVIDE GRANITE SAMPLES FOR APPROVAL
3. CONTRACTOR TO PROVIDE FULL HEIGHT BY 4' WIDE MOCK-UP FOR APPROVAL

6 / 502 **Granite Garden Wall**

3/4" = 1'-0"

DETAIL NOT USED

DETAIL NOT USED

POND | ECOS
834 INMAN VILLAGE PARKWAY
SUITE 100
ATLANTA, GEORGIA 30307
(V) 404-221-1900 (F) 404-215-9111

COPYRIGHT © 2011 BY POND & COMPANY. ALL RIGHTS RESERVED. NO COPYING OR DUPLICATION OF THESE DOCUMENTS ALLOWED WITHOUT EXPRESS WRITTEN AGREEMENT OF POND & COMPANY

Louise G. Howard Park

471 Collier Road NW, Atlanta Ga 30318

Fulton County, Atlanta GA Land Lot 146, 17th District

GEORGIA REGISTERED LANDSCAPE ARCHITECT MATTHEW WILDER 12/01/11

REVISIONS

SHEET TITLE

Construction Details

DESIGNED BY	FILE NAME
DRAWN BY T.P.	SHEET
CHECKED BY	L502
PROJECT NO. 1110295	
DATE	

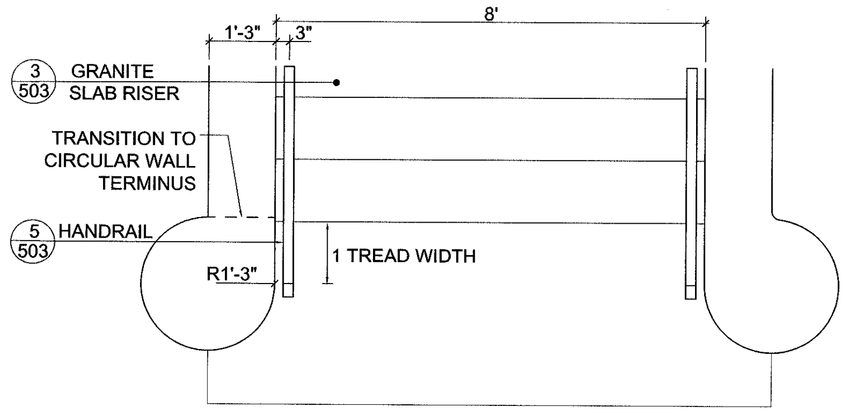

1/503 Cheekwall and Railing Detail

1/2"=1'-0"

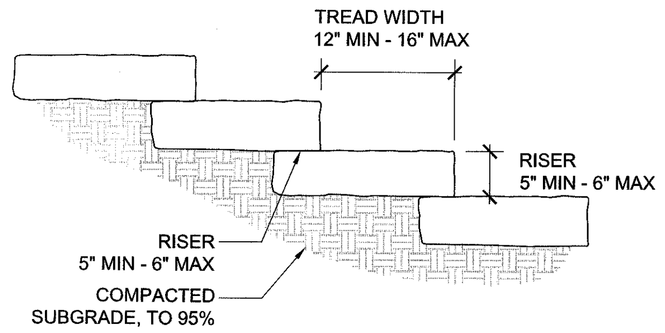

NOTES
1. TREADS/ RISERS SHALL BE IRREGULAR LENGTHS (2' MIN - 6' MAX) AND STAGGER STACKED AS SHOWN IN PLAN
2. SLABS SHALL BE SPLIT FACE ON ALL SIDES, TREAD SURFACES SHALL BE INDIVIDUALLY ADJUSTED TO REMOVE PEAKS/ POINTS FROM SURFACE

2/503 Granite Slab Steps

1"=1'-0"

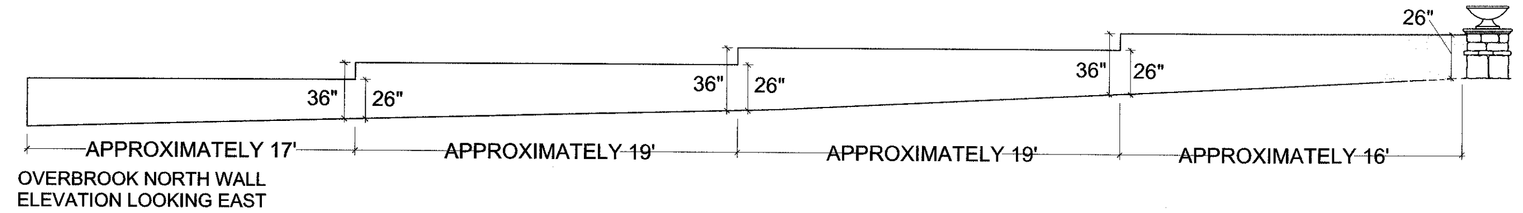

OVERBROOK NORTH WALL ELEVATION LOOKING EAST

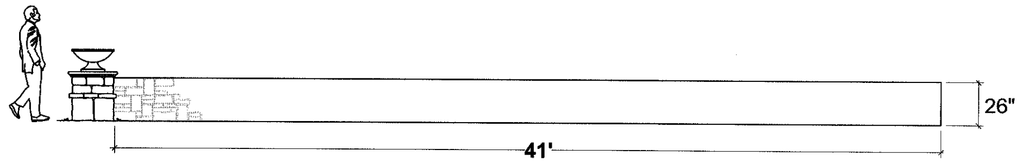

OVERBROOK SOUTH WALL ELEVATION LOOKING EAST

4/503 Granite Wall Elevations

3/16"=1'-0"

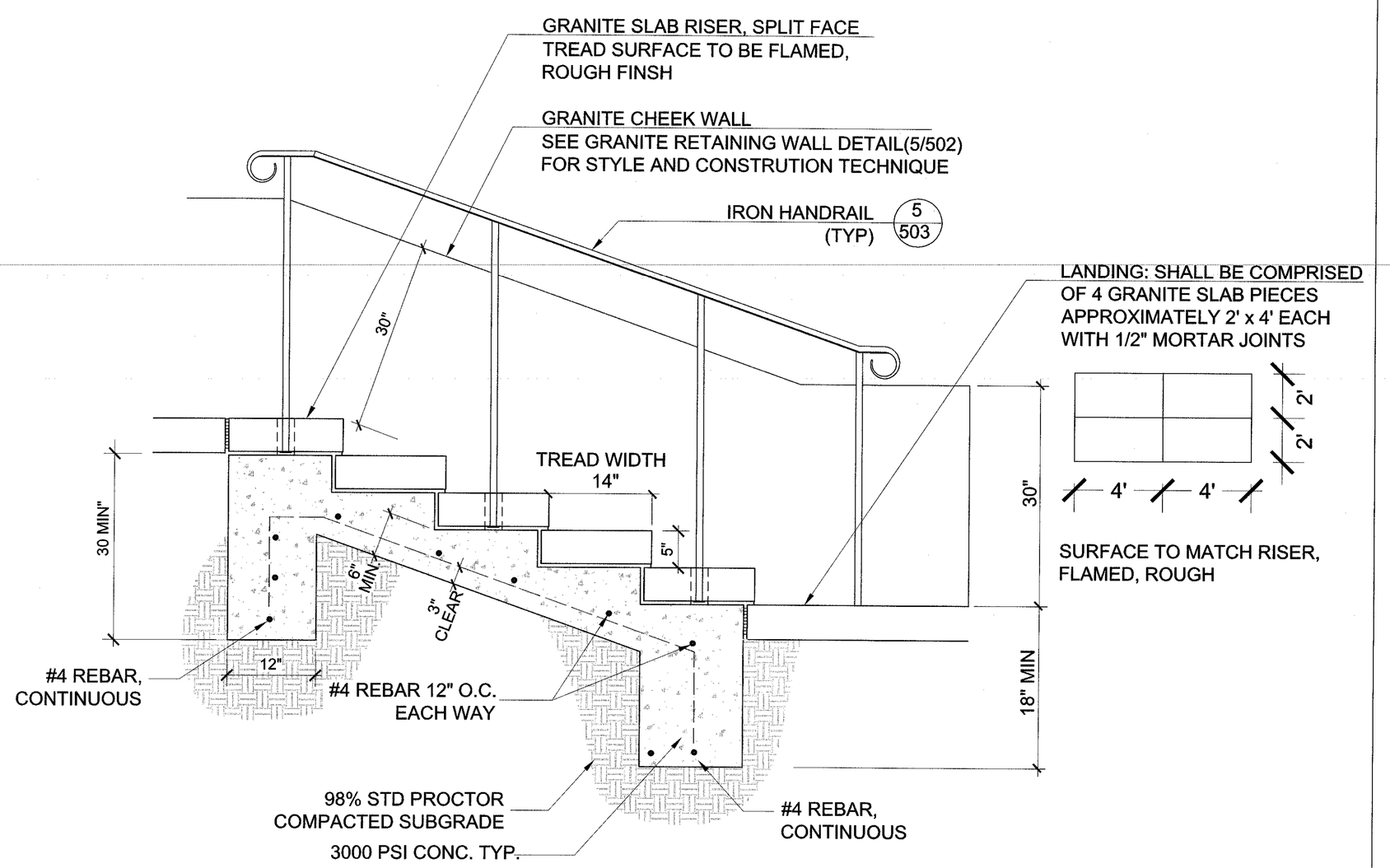

NOTES
1. SLOPE ALL TREADS 1/4" PER FOOT TO DRAIN
2. TREADS = 14" AND RISERS = 5"
3. CONTRACTOR SHALL MAKE FIELD MEASUREMENTS OF AS BUILT STEPS PRIOR TO FABRICATION OF HANDRAILS.
4. REFER TO LAYOUT PLANS FOR NUMBER OF TREADS/RISERS
5. EXTEND CONCRETE FOUNDATION A MINIMUM OF 18" WIDER ON BOTH SIDES THAN TREADS TO SUPPORT GRANITE CHEEK WALLS

3/503 Granite Stair & Handrail, Typ.

1" = 1'-0"

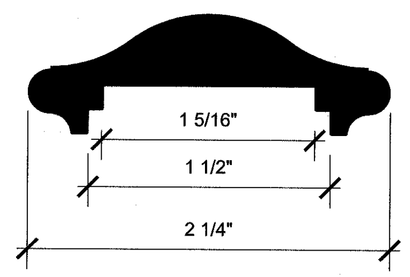

Iron Handrail Section
NTS

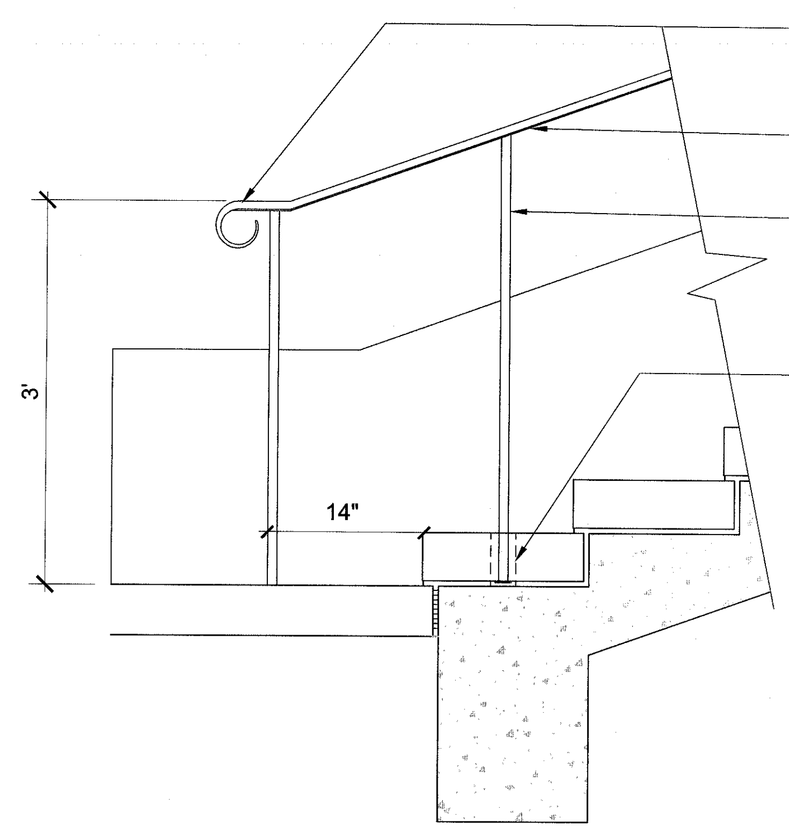

CAST IRON HANDRAIL TERMINAL FIELD ADJUSTED TO ATTACH TO STRAIGHT HANDRAIL. (1) AT EACH RAIL END, TYP.

CAST IRON HANDRAIL

NEWEL POST 1 ½" SQUARE, TYP., TO EXTEND FROM UNDERSIDE OF HANDRAIL INTO CORE DRILLED HOLE, MIN. 6" BELOW FINISH SURFACE, TYP.

CORE DRILL INTO TREAD, 2 - 2 ½" MAX. DIAMETER AND SET POST AND ANCHOR WITH NON-SHRINK GROUT

1. CONTRACTOR SHALL MAKE FIELD MEASUREMENTS OF BUILT STEPS PRIOR TO FABRICATION OF HANDRAILS.
2. CENTER NEWEL POSTS EVERY OTHER TREAD, TYP.
3. RAILING CLEARANCE SHALL BE 1½" MIN. FROM INSIDE OF WALL OR CAP STONE, BOTH SIDES
4. WELD ALL JOINTS AND CONNECTIONS FOR RAILS, CHANNELS, TERMINALS AND POSTS (CONTINUOUS). GRIND WELDS SMOOTH PRIOR TO PRIMING AND PAINTING
5. ALL HANDRAIL MATERIAL TO BE PRIMED AND RECOATED AFTER ALL FIELD MODIFICATIONS AND PAINTED. ALL MATERIAL TO RECEIVE (2) COATS BLACK EXTERIOR ENAMEL AFTER INSTALLATION. PROTECT ALL SURFACES NOT RECEIVING PAINT OR PRIMER FROM SPILL/ SPLATTER.
6. REFER TO LAYOUT PLANS FOR NUMBER OF TREADS/RISERS
7. CONTRACTOR TO PROVIDE SAMPLE RAIL, POST AND TERMINAL FOR APPROVAL

NOTE: LEVEL PORTION OF HANDRAILS TO EXTEND 12" BEYOND TOP RISER AND ONE TREAD WIDTH BEYOND THE BOTTOM RISER

NOTE: HORIZONTAL PORTION OF HANDRAIL TO EXTEND 12" BEYOND TRANSITION OF RAMP TO LANDING, TYP.

5/503 Iron Handrail

NTS

POND ECOS
POND | ECOS
834 INMAN VILLAGE PARKWAY
SUITE 100
ATLANTA, GEORGIA 30307
(V) 404-221-1900 (F) 404-215-9111

COPYRIGHT © 2011 BY POND & COMPANY. ALL RIGHTS RESERVED. NO COPYING OR DUPLICATION OF THESE DOCUMENTS IS ALLOWED WITHOUT THE EXPRESS WRITTEN AGREEMENT OF POND & COMPANY

Louise G. Howard Park

471 Collier Road NW, Atlanta Ga 30318
Fulton County, Atlanta GA Land Lot 146, 17th District

GEORGIA REGISTERED LANDSCAPE ARCHITECT
12/01/11
MATTHEW WILDER

REVISIONS

SHEET TITLE
Construction Details

DESIGNED BY	FILE NAME
DRAWN BY T.P.	SHEET
CHECKED BY	L503
PROJECT NO. 1110295	
DATE	

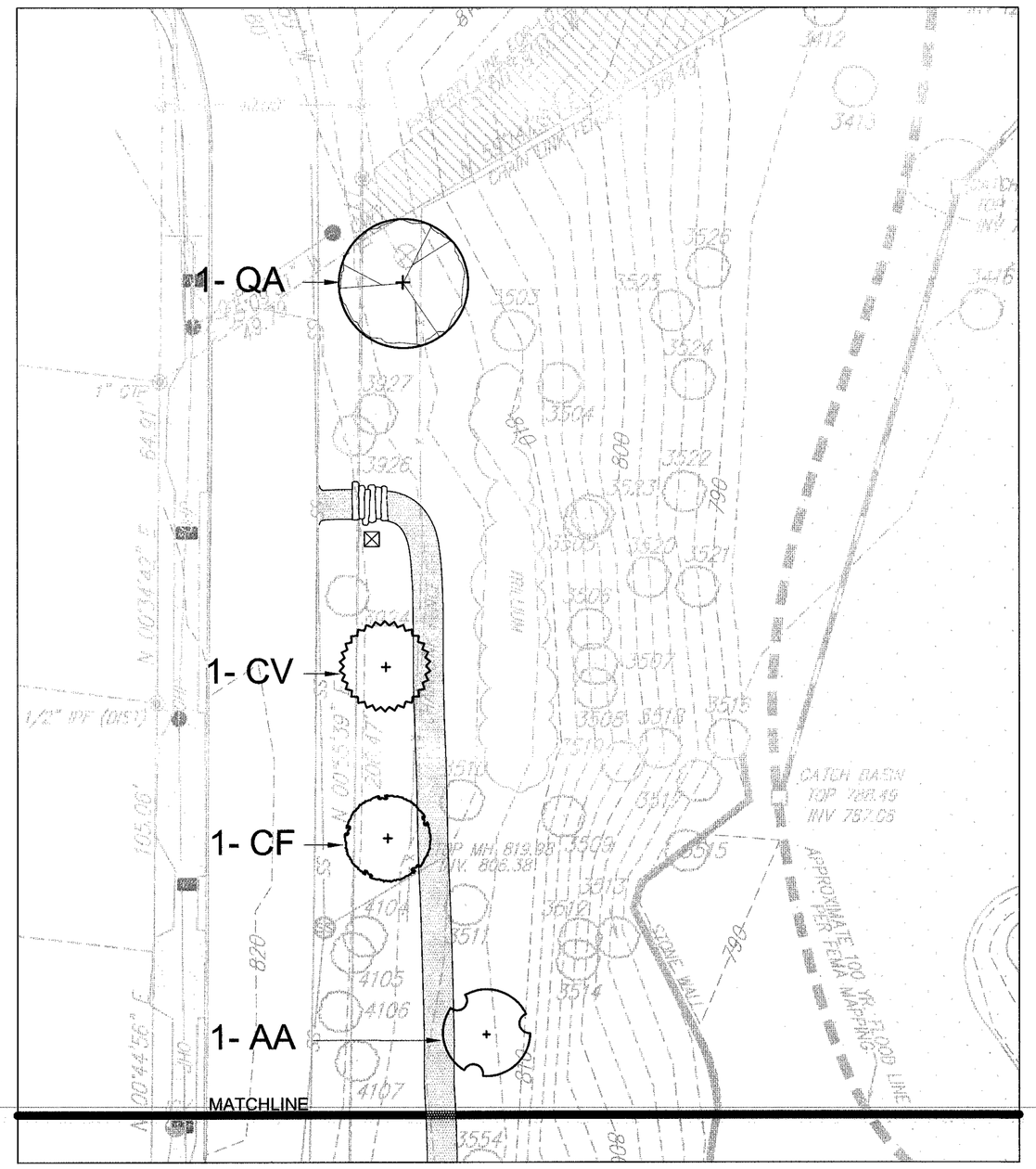

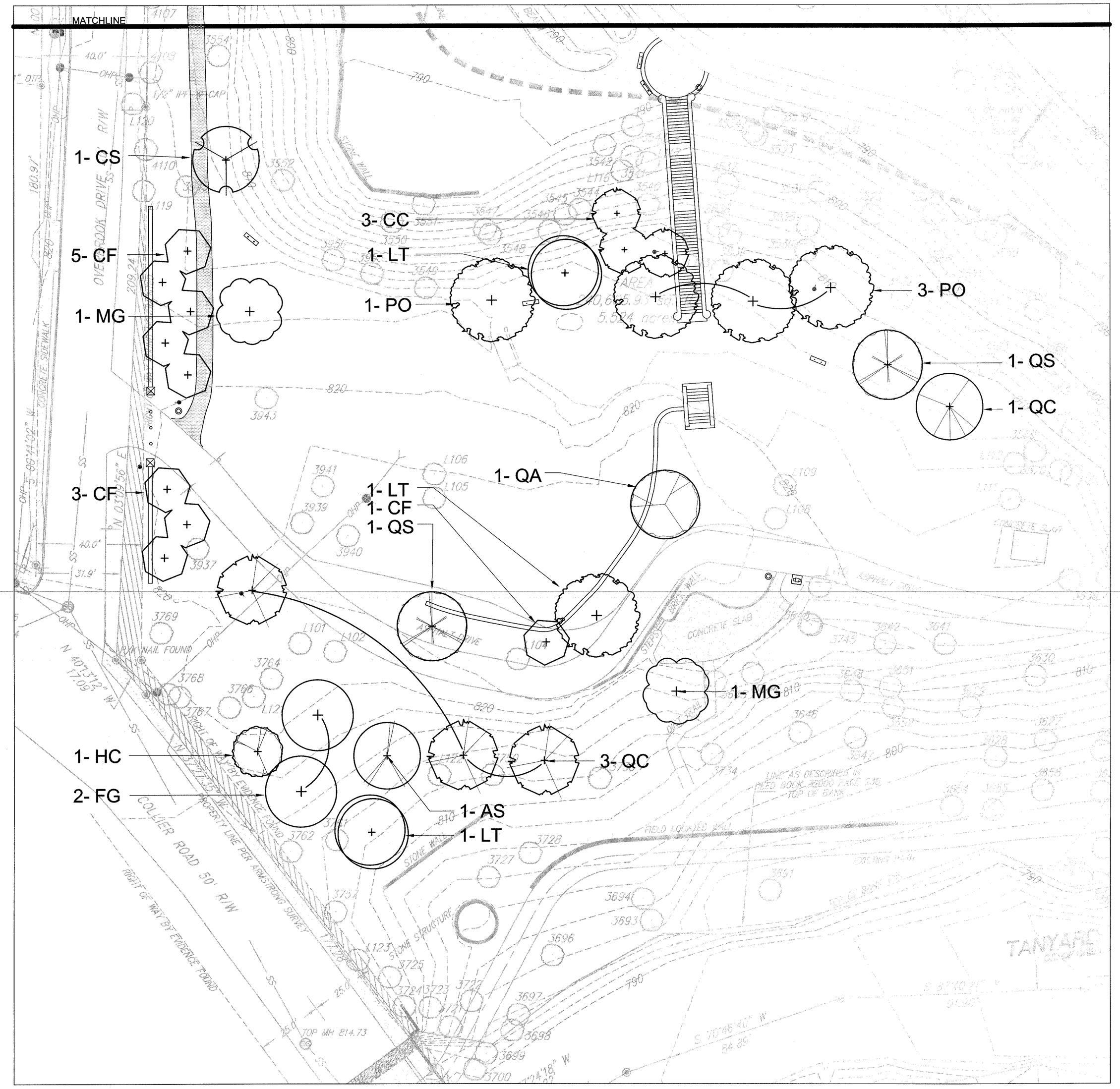

0' 10' 20' 40' 80'
Scale: 1" = 20'

POND ECOS
POND | ECOS
834 INMAN VILLAGE PARKWAY
SUITE 100
ATLANTA, GEORGIA 30307
(V) 404-221-1900 (F) 404-215-9111

COPYRIGHT © 2011 BY POND & COMPANY. ALL RIGHTS RESERVED. NO COPYING OR DUPLICATION OF THESE DOCUMENTS IS ALLOWED WITHOUT WRITTEN CONSENT AGREEMENT OF POND & COMPANY

Louise G. Howard Park

471 Collier Road NW, Atlanta Ga 30318

Fulton County, Atlanta GA Land Lot 146, 17th District

GEORGIA REGISTERED LANDSCAPE ARCHITECT MATTHEW WILDER
12/16/11

REVISIONS

SHEET TITLE
Landscape Plan

DESIGNED BY	FILE NAME
DRAWN BY: T.P.	SHEET
CHECKED BY	L600
PROJECT NO.: 1110295	
DATE	

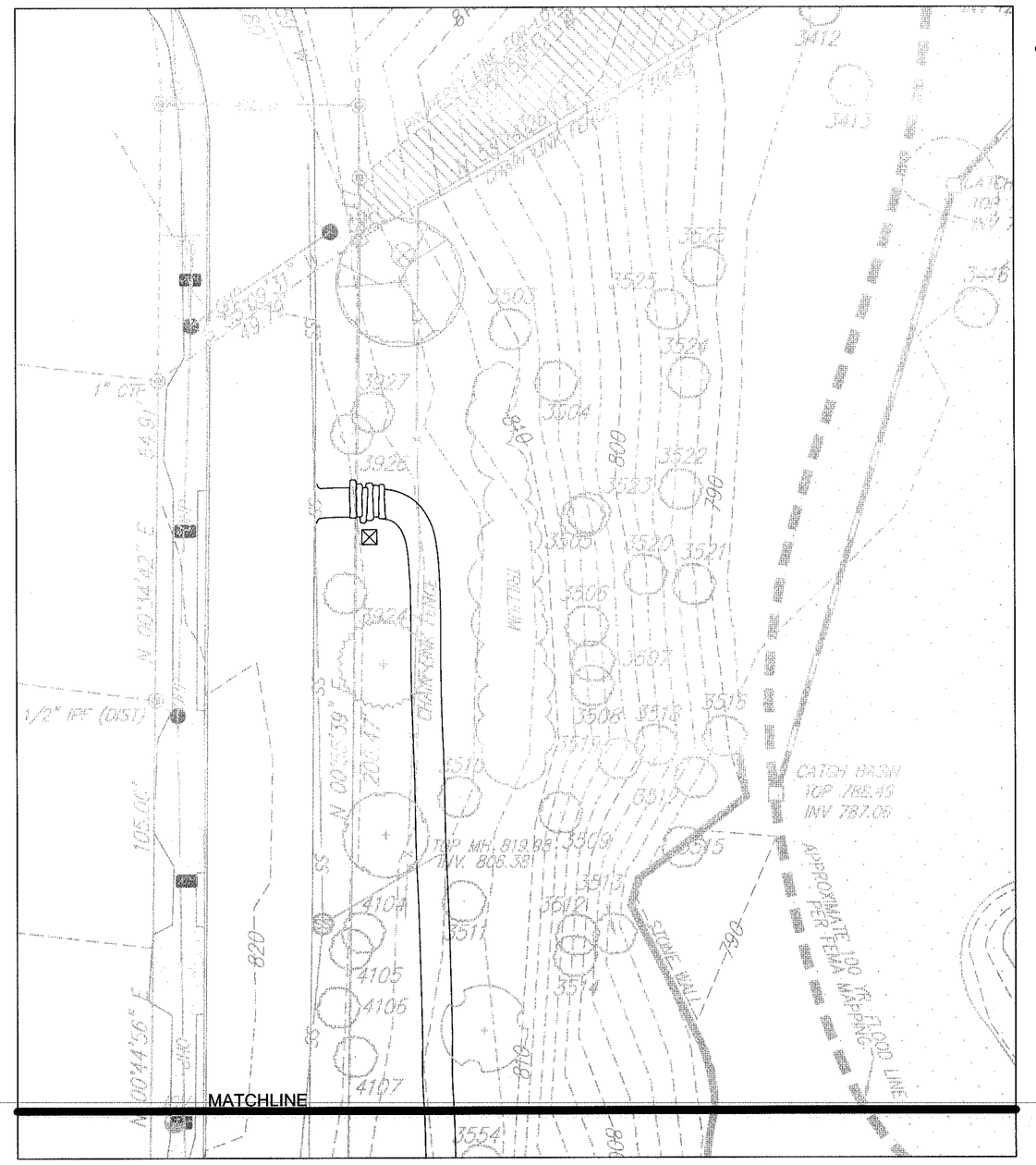

Scale: 1" = 20'

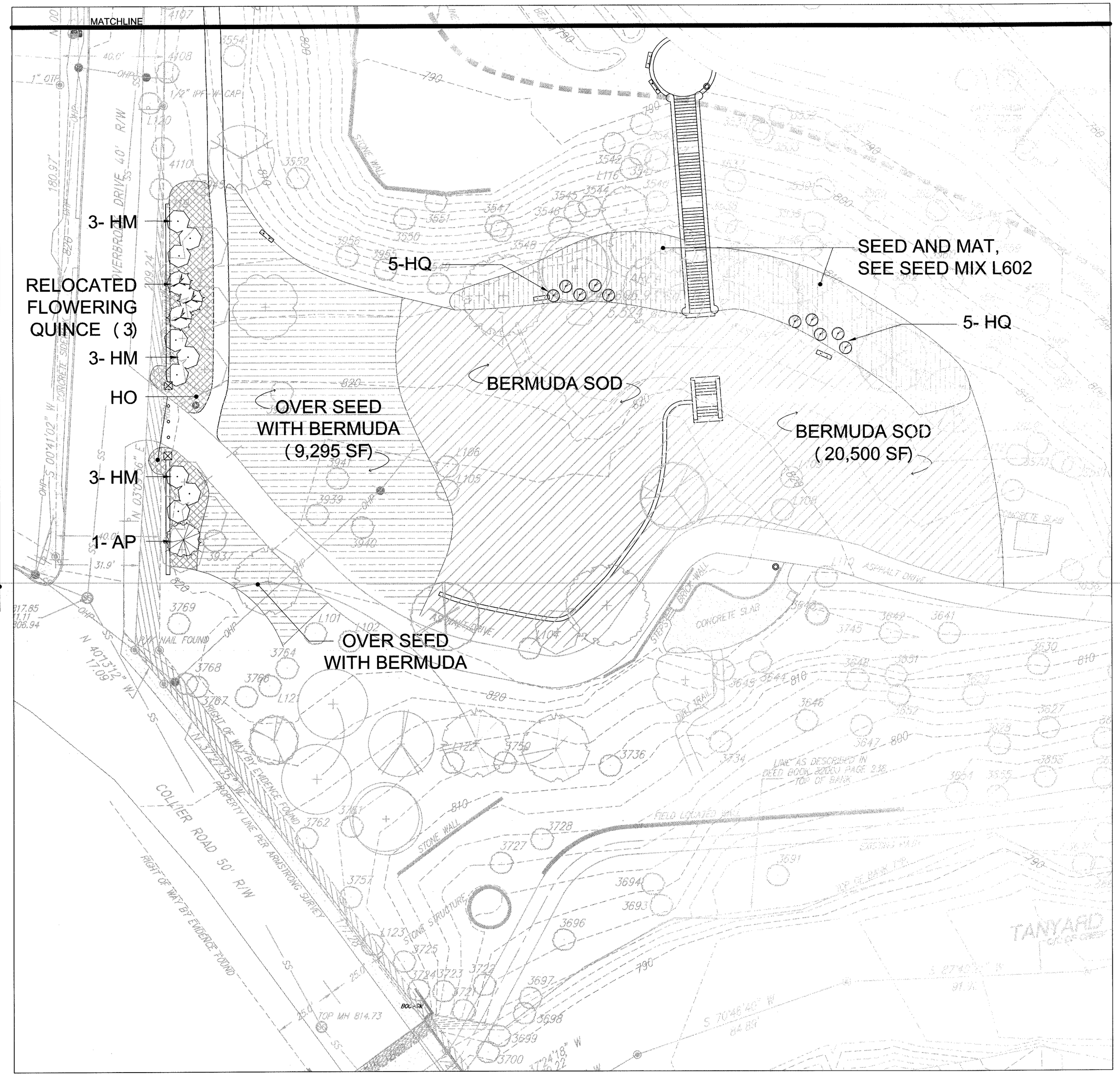

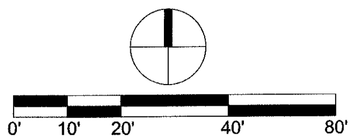

Scale: 1" = 20'

POND ECOS

POND | ECOS
834 INMAN VILLAGE PARKWAY
SUITE 100
ATLANTA, GEORGIA 30307
(V) 404-221-1900 (F) 404-215-9111

COPYRIGHT © 2011 BY POND & COMPANY. ALL RIGHTS RESERVED. NO COPYING OR DUPLICATION OF THESE DOCUMENTS IS ALLOWED WITHOUT WRITTEN PERMISSION AGREEMENT OF POND & COMPANY

Louise G. Howard Park

471 Collier Road NW, Atlanta Ga 30318

Fulton County, Atlanta GA Land Lot 146, 17th District

GEORGIA REGISTERED No. 1386 LANDSCAPE ARCHITECT MATTHEW WILDER 12/01/11

REVISIONS

SHEET TITLE

Landscape Plan Enlargements

DESIGNED BY	FILE NAME
DRAWN BY T.P.	SHEET
CHECKED BY	L601
PROJECT NO. 1110295	
DATE	

NOTE:
GROUNDCOVERS AND PERENNIALS TO BE INSTALLED WITH TRIANGULAR SPACING

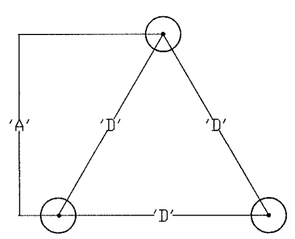

PLANT (TYP.)

PLANT SPACING 'D'	ROW 'A'
8" O.C.	7.00" O.C.
10" O.C.	8.5" O.C.
12" O.C.	10.5" O.C.
18" O.C.	15.5" O.C.
24" O.C.	21.0" O.C.
36" O.C.	30.0" O.C.
48" O.C.	31.5" O.C.

1/602 **Plant Spacing**

N.T.S.

NOTE: FOR CONTAINER GROWN SHRUBS CUT BOUND ROOTS VERTICALY 3 TIMES TO PROMOTE PROPER ROOT GROWTH

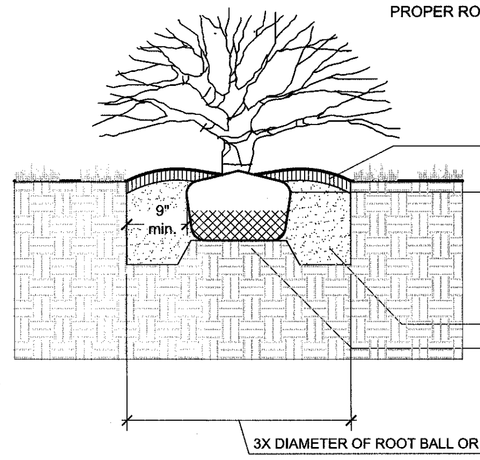

3" SHREDDED HARDWOOD MULCH

ROPES AT TOP OF BALL SHALL BE CUT. REMOVE TOP 1/2 OF BURLAP. NON-BIODEGRADABLE MATERIAL TO BE REMOVED

PREPARED BACKFILL MIXTURE

UNDISTURBED SOIL PEDESTAL

3X DIAMETER OF ROOT BALL OR CONTAINER

4/602 **Shrub Planting Detail**

3/4" = 1'-0"

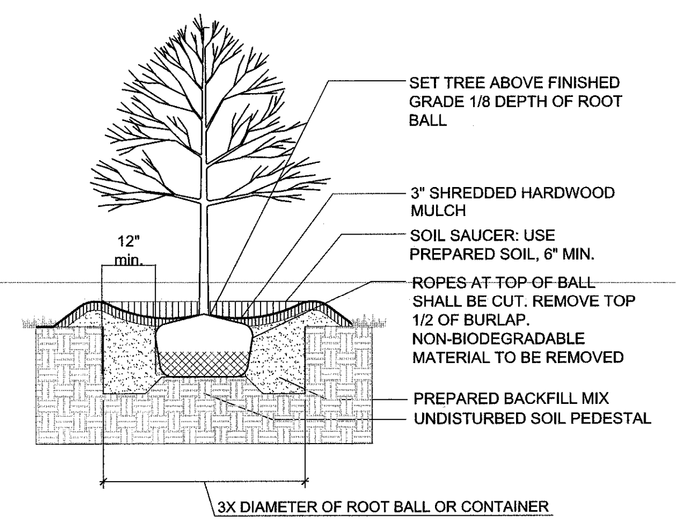

SET TREE ABOVE FINISHED GRADE 1/8 DEPTH OF ROOT BALL

3" SHREDDED HARDWOOD MULCH

SOIL SAUCER: USE PREPARED SOIL, 6" MIN.

ROPES AT TOP OF BALL SHALL BE CUT. REMOVE TOP 1/2 OF BURLAP. NON-BIODEGRADABLE MATERIAL TO BE REMOVED

PREPARED BACKFILL MIX

UNDISTURBED SOIL PEDESTAL

3X DIAMETER OF ROOT BALL OR CONTAINER

2/602 **Tree Planting Detail**

1/2" = 1'-0"

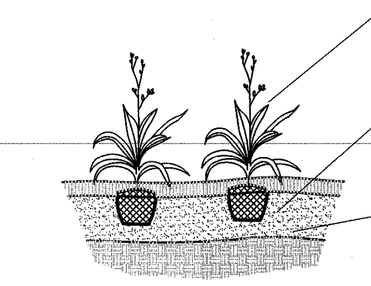

SET GROUNDCOVERS AND PERENNIALS IN STAGGERED ROWS AT SPECIFIED SPACING. MULCH ENTIRE BED WITH 3" OF SHREDDED HARDWOOD MULCH.

TILL ENTIRE BED TO A DEPTH OF 8" AND AND SUPPLEMENT WITH ORGANIC SOIL MIX

PLANTING SOIL MIX - SEE SPECS

5/602 **Groundcover Planting Detail**

1/2" = 1'-0"

PLANT LIST						
ABBREV.	QTY.	BOTANICAL NAME	COMMON NAME	SIZE	SPACING	REMARKS
GROUNDCOVERS						
		CYNODON DACTYLON	BERMUDA GRASS 'TIFSPORT'	SOD	100% COVER	
HO	200	HELLEBORUS ORIENTALIS	LENTEN ROSE	1 GAL	18" O.C.	
HS	205	HEMEROCALLIS SPP.	DAYLILY	1 GAL	18" O.C.	MIX OF COLORS
NS	205	NARCISSUS SPP.	DAFFODIL	BULB	18" O.C.	YELLOWS AND WHITES
DECIDUOUS TREES						
AS	1	ACER SACCHARUM	SUGAR MAPLE	3" CAL.	AS SHOWN	
AA	1	AMELANCHIER ARBOREA	SERVICEBERRY	2.5" CAL.	AS SHOWN	MULTI-TRUNK
CC	3	CARPINUS CAROLINIANA	AMERICAN HORNBEAM	2.5" CAL	AS SHOWN	
CV	1	CHIONANTHUS VIRGINICUS	WHITE FRINGE TREE	2.5" CAL.	AS SHOWN	
CS	1	CLADRASTIS SPP.	YELLOWWOOD	4"	AS SHOWN	
CF	10	CORNUS FLORIDA	DOGWOOD	2.5" CAL.	AS SHOWN	
FG	2	FAGUS GRANDIFOLIA	AMERICAN BEECH	2.5" CAL.	AS SHOWN	
GB	1	GINGKO BILOBA	GINGKO	2.5" CAL.	AS SHOWN	
HC	1	HALESIA CAROLINA	CAROLINA SILVERBELL	2.5" CAL.	AS SHOWN	
LT	2	LIRIODENDRON TULIPIFERA	TULIP POPLAR	4", 2.5" CAL.	AS SHOWN	
MG	2	MAGNOLIA GRANDIFLORA	SOUTHERN MAGNOLIA	3" CAL.	AS SHOWN	
PO	4	PLATANUS OCCIDENTALIS	SYCAMORE	3"	AS SHOWN	
QA	2	QUERCUS ALBA	WHITE OAK	3" CAL.	AS SHOWN	
QC	2	QUERCUS COCCINEA	SCARLET OAK	3" CAL.	AS SHOWN	
QS	2	QUERCUS SHUMARDII	SHUMARD OAK	4" CAL.	AS SHOWN	
SHRUBS						
AP	1	AESCULUS PARVIFOLIA	BOTTLEBRUSH BUCKEYE		AS SHOWN	
HM	9	HYDRANGEA MACROPHYLLA 'BRIDGE'S HEAD'	OAKLEAF HYDRANGEA		8' O.C.	

SEED MIX A - 15 Lbs. / Acre		
% of Mix	Botanical Name	Common Name
20.0	*Andropogon ternarius*	Splitbeard Bluestem
20.0	*Andropogon virginicus*	Broomsedge
40.0	*Schizachyrium scoparium*	Little Bluestem
10.0	*Chamaecrista fasciculata*	Partridge Pea
10.0	*Rudbeckia hirta*	Black-eyed Susan

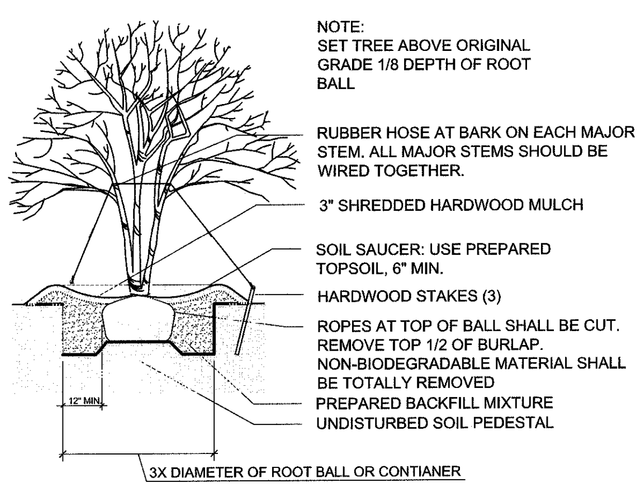

NOTE:
SET TREE ABOVE ORIGINAL GRADE 1/8 DEPTH OF ROOT BALL

RUBBER HOSE AT BARK ON EACH MAJOR STEM. ALL MAJOR STEMS SHOULD BE WIRED TOGETHER.

3" SHREDDED HARDWOOD MULCH

SOIL SAUCER: USE PREPARED TOPSOIL, 6" MIN.

HARDWOOD STAKES (3)

ROPES AT TOP OF BALL SHALL BE CUT. REMOVE TOP 1/2 OF BURLAP. NON-BIODEGRADABLE MATERIAL SHALL BE TOTALLY REMOVED

PREPARED BACKFILL MIXTURE

UNDISTURBED SOIL PEDESTAL

3X DIAMETER OF ROOT BALL OR CONTIANER

3/602 **Ornamental Tree Planting Detail**

1/2" = 1'-0"

NOTE:
PROVIDE FENCE AS SHOWN ON PLAN. PROVIDE AT LEAST ONE FOOT OF DISTANCE FROM TREE TO FENCE, FOR EACH INCH OF TREE DBH.

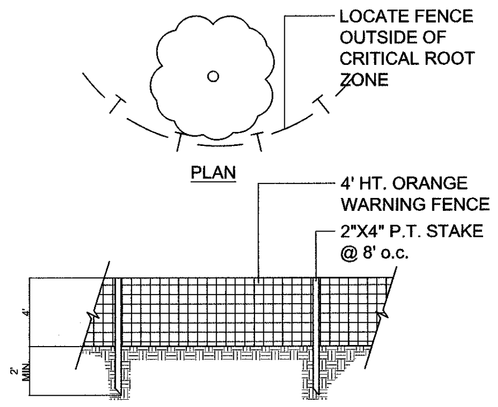

LOCATE FENCE OUTSIDE OF CRITICAL ROOT ZONE

4' HT. ORANGE WARNING FENCE

2"X4" P.T. STAKE @ 8' o.c.

6/602 **Tree Save Fence Detail**

N.T.S

GENERAL PLANTING NOTES:

1. ALL PLANTS MUST BE HEALTHY, VIGOROUS MATERIAL, FREE OF PESTS & DISEASES.
2. ALL PLANTS MUST BE CONTAINER-GROWN OR BALLED & BURLAPPED (B&B) OR OTHERWISE AS INDICATED IN THE PLANT LIST.
3. ALL TREES MUST BE STRAIGHT TRUNKED, FULL-HEADED & MEET ALL REQUIREMENTS SPECIFIED.
4. ALL PLANTS ARE SUBJECT TO THE APPROVAL OF THE LANDSCAPE ARCHITECT & THE OWNER BEFORE, DURING & AFTER INSTALLATION UNTIL THE DATE OF FINAL ACCEPTANCE.
5. ALL TREES MUST BE GUYED OR STAKED AS SHOWN IN THE DETAILS.
6. ALL PLANTS & PLANTING AREAS MUST BE COMPLETELY MULCHED AS PER SPECIFICATIONS.
7. PRIOR TO CONSTRUCTION, THE LANDSCAPE CONTRACTOR SHALL BE RESPONSIBLE FOR LOCATING ALL UNDERGROUND UTILITIES & SHALL AVOID DAMAGE TO ALL UTILITIES DURING THE COURSE OF THE WORK. THE LANDSCAPE CONTRACTOR IS RESPONSIBLE FOR REPAIRING ANY & ALL DAMAGE TO UTILITIES, STRUCTURES, SITE APPURTENANCES, ETC. WHICH OCCURS AS A RESULT OF THE LANDSCAPE CONSTRUCTION.
8. THE LANDSCAPE CONTRACTOR IS RESPONSIBLE FOR VERIFYING ALL QUANTITIES SHOWN ON THESE PLANS BEFORE PRICING THE WORK.
9. THE LANDSCAPE CONTRACTOR IS RESPONSIBLE FOR MAINTAINING ALL PLANTING (INCLUDING, BUT NOT LIMITED TO: WATERING, SPRAYING, MULCHING, FERTILIZING, ETC.) OF PLANTING AREAS & LAWNS UNTIL THE WORK IS ACCEPTED IN TOTAL BY THE LANDSCAPE ARCHITECT & THE OWNER.
10. THE LANDSCAPE CONTRACTOR SHALL COMPLETELY GUARANTEE ALL PLANT MATERIAL FOR A PERIOD OF ONE (1) YEAR BEGINNING AT THE DATE OF FINAL ACCEPTANCE. THE LANDSCAPE CONTRACTOR SHALL PROMPTLY MAKE ALL REPLACEMENTS BEFORE OR AT THE END OF THE GUARANTEE PERIOD (AS PER DIRECTION OF THE OWNER).
11. THE OWNER AGREES TO PERFORM ALL LANDSCAPE MAINTENANCE (INCLUDING WATERING) THROUGHOUT THE ONE YEAR GUARANTEE PERIOD UNLESS OTHERWISE DETERMINED.
12. THE LANDSCAPE ARCHITECT WILL APPROVE THE STAKED LOCATION OF ALL MATERIAL PRIOR TO INSTALLATION.
13. AFTER BEING DUG AT THE NURSERY SOURCE, ALL TREES IN LEAF SHALL BE ACCLIMATED FOR TWO (2) WEEKS UNDER A MIST SYSTEM PRIOR TO INSTALLATION.
14. ANY PLANT MATERIAL WHICH DIES, TURNS BROWN OR DEFOLIATES (PRIOR TO FINAL ACCEPTANCE OF THE WORK) SHALL BE PROMPTLY REMOVED FROM THE SITE & REPLACED WITH MATERIAL OF THE SAME SPECIES, QUANTITY, SIZE AND MEETING ALL PLANT LIST SPECIFICATIONS.
15. STANDARDS SET FORTH IN 'AMERICAN STANDARDS FOR NURSERY STOCK' REPRESENT GUIDELINE SPECIFICATIONS ONLY AND CONSTITUTE MINIMUM QUALITY REQUIREMENTS FOR PLANT MATERIAL.
16. ALL SOD AND SEED TO BE AS SPECIFIED. TEMPORARY GRASS TO BE COMBINATION OF ANNUAL RYE AND FESCUE SEED. REFER TO SPECIFICATIONS FOR INSTALLATION INFORMATION.
17. PLANT SYMBOLS ON THE LANDSCAPE PLAN SUPERCEDE QUANTITIES SHOWN IN THE PLANT LIST.
18. IN SIZE GRADING B&B TREES, CALIPER SHALL TAKE PRECEDENT OVER HEIGHT
19. IN SIZE GRADING MULTI-STEM TREES, HEIGHT SHALL TAKE PRECEDENCE OVER CALIPER

POND ECOS
POND | ECOS
834 INMAN VILLAGE PARKWAY
SUITE 100
ATLANTA, GEORGIA 30307
(V) 404-221-1900 (F) 404-215-9111

COPYRIGHT © 2011 BY POND & COMPANY. ALL RIGHTS RESERVED. NO COPYING OR DUPLICATION OF THESE DOCUMENTS IS ALLOWED WITHOUT THE EXPRESS WRITTEN AGREEMENT OF POND & COMPANY

Louise G. Howard Park

471 Collier Road NW, Atlanta Ga 30318

Fulton County, Atlanta GA Land Lot 146, 17th District

GEORGIA REGISTERED LANDSCAPE ARCHITECT MATTHEW WILDER No. 1396 12/01/11

REVISIONS

SHEET TITLE

Landscape Details

DESIGNED BY	FILE NAME
DRAWN BY T.P.	SHEET
CHECKED BY	L602
PROJECT NO. 1110295	
DATE	