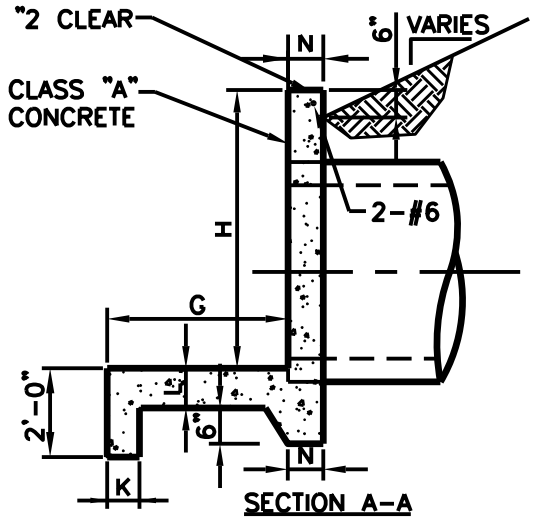

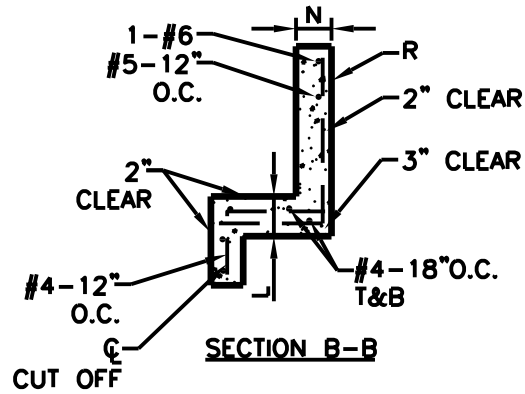

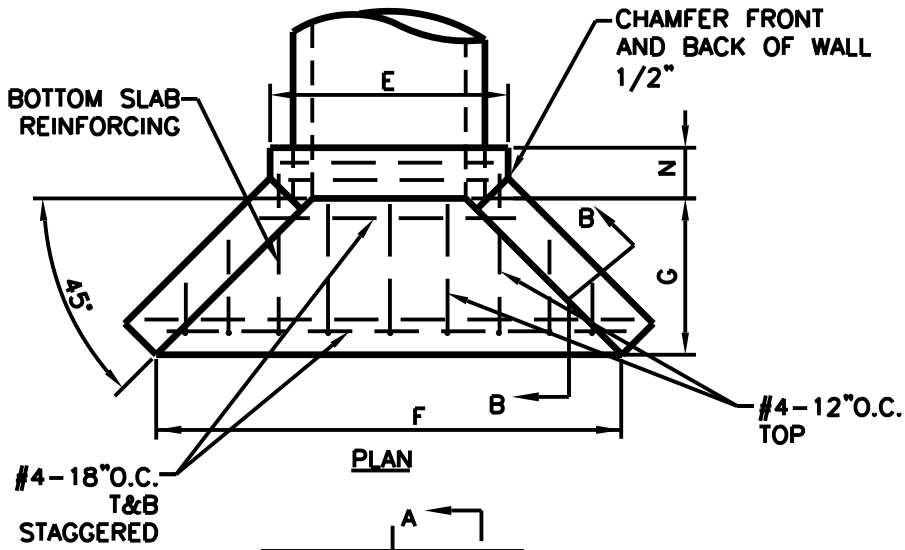

NOTE:
EXPOSED EDGES TO BE CHAMFERED 1"X1"

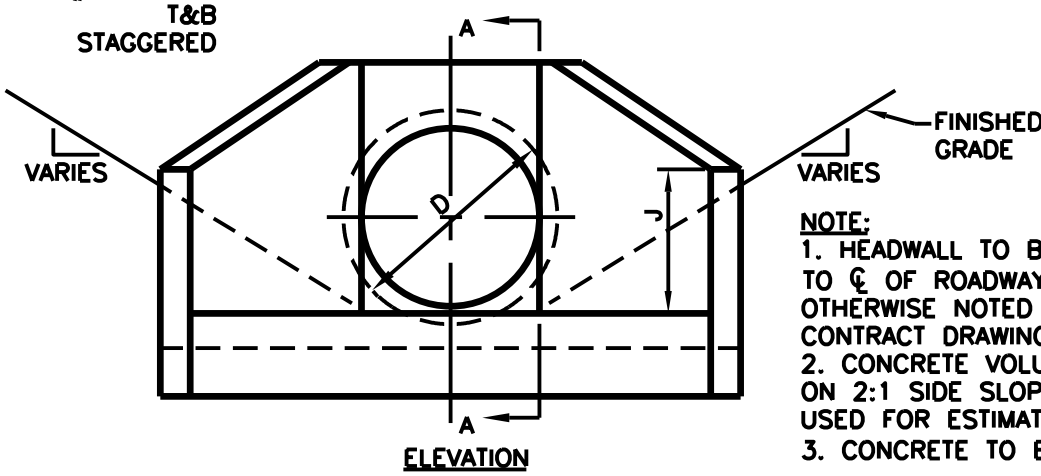

NOTE:
1. HEADWALL TO BE PARALLEL TO ℄ OF ROADWAY UNLESS OTHERWISE NOTED IN CONTRACT DRAWINGS.
2. CONCRETE VOLUME BASED ON 2:1 SIDE SLOPES TO BE USED FOR ESTIMATING ONLY.
3. CONCRETE TO BE CLASS "A"

THIS DETAIL WAS TAKEN FROM THE CITY OF ATLANTA'S WEBSITE. IT MAY HAVE BEEN MODIFIED AND SHOULD BE REVIEWED THOROUGHLY.

City of Atlanta	STANDARD DETAILS	REV.
		DATE: SEPT 2011
	STANDARD HEADWALL SHEET 1 OF 2	ORIG. DATE: JULY 1984
		SCALE: N.T.S.
		DETAIL NO. SW-G_HW002